BUILDING TRUST

ALIVA CONVERTO
THIN STREAM PROCESS
AIR CONVEYING
SPARE PARTS & ACCESSORIES

Legal notice

The content of this spare parts and accessories, is not part of a previous or existing agreement, promise or legal relationship. All obligations on part of Sika Schweiz AG, Aliva Equipment, result from the underlying purchase contract, which also contains the complete and solely valid warranty regulation. These contractual warranty provisions are neither extended nor limited by the specifications contained in this spare parts and accessories,.

The information contained in this spare parts and accessories, can be changed at any moment without any special notification. It does not constitute any obligation in relation to functionality on the part of Sika Schweiz AG, Aliva Equipment. Sika Schweiz AG, Aliva Equipment, may make improvements and/or adjustments to this spare parts and accessories, or to the components listed in it.

© Copyright 2012-2014 Sika Schweiz AG, Aliva Equipment
All rights reserved.

All parts of this spare parts and accessories, are subject to copyright. Any duplication or distribution, complete or partial, is prohibited. No part of this spare parts and accessories, may be copied, photo-technically duplicated, reproduced or transferred to any other electronic medium or into a machine readable form. In such a case, express permission must first be granted by Sika Schweiz AG, Aliva Equipment, Tüffenwies 16, CH-8048 Zurich, Switzerland.

Trademarks: Aliva is a protected trade name of Sika Schweiz AG, Aliva Equipment. Other trade names and product names are protected by their respective owners.

Printed in Switzerland, 2013 Sika Schweiz AG, Aliva Equipment / Switzerland.

Article number: 315558_TBA_AB

Version 2.0 / 08. 2015

SIKA SCHWEIZ AG
Aliva Equipment
Tüffenwies 16
CH-8048 Zürich
Switzerland

Contact
Phone +41 58 436 32 22
Fax +41 58 436 41 40
www.aliva-equipment.com

BUILDING TRUST

Table of contents

1 Introduction 4
1.1 Spare parts using 4
1.2 Operating and maintenance instructions 4
1.3 Machine overview 5
1.4 Performance / Output data 8

2 Safety instructions 12
2.1 Residual dangers 13

3 Ordering instructions 15
3.1 Required information. 15
3.2 Address for orders 15
3.3 Thin stream overview 16

4 Reduction 18

5 Conveying hose 20
5.1 Conveying hose, compl. 20
5.2 Conveying hose without coupling 22
5.3 Conveying hose, single parts 24

6 Conveying pipe 26
6.1 Conveying pipe, compl.. 26
6.2 Conveying pipe, single parts. 26

7 Coupling 28
7.1 Coupling, compl. 28
7.2 Coupling, single parts 28

8 Converto System manual - Thin stream 30
8.1 Converto System Repro 30
8.2 Converto System ReproFlex. 30
8.3 Converto System dry / wet 32
8.4 Converto Sytem BackInlet 32
8.5 Converto System wet 32
8.6 Converto Repro. 34
8.7 Converto ReproFlex 34
8.8 Converto dry 36
8.9 Converto wet. 36
8.10 Converto System Repro, single parts DN25. 38
8.11 Converto System dry, single parts DN32 40
8.12 Converto System BackInlet, single parts DN32 40
8.13 Converto System dry, single parts DN38 42
8.14 Converto System BackInlet, single parts DN38 42
8.15 Converto System dry, single parts DN50 44

8.16 Converto System BackInlet, single parts DN50 44
8.17 Converto System wet, single parts DN50. 44
8.18 Converto System dry, single parts DN60 46
8.19 Converto System BackInlet, single parts DN60 46
8.20 Converto System wet, single parts DN60. 46
8.21 Converto System dry, single parts DN65 48
8.22 Converto System BackInlet, single parts DN65 48
8.23 Converto System wet, single parts DN65. 48

9 Converto System RoboSpray - Thin stream 50
9.1 Converto System RoboSpray. 50
9.2 Converto System RoboSpray BackInlet. 50
9.3 Converto System RoboSpray, single parts 52
9.4 Converto System RoboSpray BackInlet, single parts. 52
9.5 Converto RoboSpray, single parts 54
9.6 Converto RoboSpray BackInlet, single parts 54

10 Converto System refractory - Thin stream 56
10.1 Converto System refractory 56
10.2 Converto System refractory without nozzle 56
10.3 Converto refractory. 56
10.4 Converto System refractory, single parts DN 32 / 38. 58
10.5 Converto System refractory, single parts DN50. 60

11 Back-fill lance 62
11.1 Back-fill lance, compl.. 62
11.2 Back-fill lance, single parts. 62

12 Compressor air hose 64
12.1 Compressor air hose, 10 or 20 metres, compl. 64
12.2 Compressor air hose, 10 or 20 metres, single parts 64
12.3 Air supply accessories compressor / rotor machine. 64

13 Air hose, rotor machine - dispensing unit 66
13.1 Air hose, compl. 66
13.2 Air hose, single parts 66
13.3 Connectors / air supply accessories - dispensing unit 66

14 Water hose - dispensing unit 68
14.1 Water hose, 10 or 20 metres, compl. 68
14.2 Water hose, 10 or 20 metres, single parts 68

15 Water hose, direct 70
15.1 Water hose, compl. 70
15.2 Water hose, single parts. 70

16 Additive / water hose 72
16.1 Additive / water hose, 10 or 20 metres, compl. 72
16.2 Additive / water hose, 10 or 20 metres, single parts 72

BUILDING TRUST

17 Pipeline of water / compressed air. 74
17.1 Water / compressed air pipeline, compl. 3 m and 6 m 74
17.2 Compressed air pipeline accessories 74
17.3 Water pipeline accessories 74

18 Pipeline for additives. 76
18.1 Inox pipe for additives, compl. 76
18.2 Inox pipe single parts / accessories 76

19 Suction hose for dispensing unit. 78
19.1 Suction hose, compl.. 78
19.2 Suction hose, single parts 78

20 Personal protection equipment 80
20.1 Personal protection equipment, single parts 80

21 Aliva Rotor Repro 0.6 liters and Aliva Converto. 82

1 Introduction

All details in this spare parts and accessories catalogue regarding the conveying lengths, diameter of lines, configurations, etc, are recommendations .

It is quite possible that these recommendations do not result in satisfactory results in special applications, and that some parameters may have to be changed.

Sika Schweiz AG, Aliva Equipment, neither claims that the recommendations are exhaustive nor does it accept any liability in this regard.

1.1 Spare parts using

Use only original spare parts from Sika Schweiz AG, Aliva Equipment, and install them properly.

All information on the use of original spare parts is enclosed in the corresponding operating and maintenance instructions.

1.2 Operating and maintenance instructions

All safety, handling, operation and maintenance instructions contained in the operating and maintenance instructions must be observed.

Non-observance of these instructions may result in death, severe injuries and significant damage to property.

1.3 Machine overview

1.3.1 Aliva 237 and Aliva 246 (dry spraying)

Rotor size	Type / volume		Inside ø conveyor hose
0.6 l	Standard / Basic Top / Extended Air / Air	0.35 m³/h 0.2 … 0.45 m³/h 0.2 … 0.45 m³/h	25 mm
0.7 l	Standard / Basic Top / Extended Air / Air	0.4 m³/h 0.2 … 0.5 m³/h 0.2 … 0.5 m³/h	32 mm
2.0 l	Standard / Basic Top / Extended Air / Air	1.1 m³/h 0.6 … 1.4 m³/h 0.6 … 1.4 m³/h	38 mm
3.6 l	Standard / Basic Top / Extended Air / Air	2.0 m³/h 1.1 … 2.5 m³/h 1.1 … 2.5 m³/h	38 mm
5.6 l	Standard / Basic Top / Extended Air / Air	3.2 m³/h 1.7 … 4.0 m³/h 1.7 … 4.0 m³/h	50 mm

1.3.2 Aliva 252 (dry spraying)

Rotor size	Type / volume		Inside ø conveyor hose
Hose rotor 10 l	Basic Air	5.0 m³/h 3.5 … 7.0 m³/h	60 mm
Hose rotor 16 l	Basic Air	8.0 m³/h 5.5 … 11.0 m³/h	65 mm

1.3.3 Aliva 257 (dry spraying)

Rotor size	Type / volume		Inside ø conveyor hose
2.5 l	Top Air	0.7 … 2.0 m³/h 0.7 … 2.0 m³/h	38 mm
6.0 l	Top Air	1.9 … 5.0 m³/h 1.9 … 5.0 m³/h	50 mm
12.0 l	Top Air	3.6 … 9.6 m³/h 3.6 … 9.6 m³/h	60 mm

1.3.4 Aliva 257 (wet spraying)

Rotor size	Type / volume		Inside ø conveyor hose
6.0 l	Top Air	1.9 … 5.0 m³/h 1.9 … 5.0 m³/h	50 mm
12.0 l	Top Air	3.6 … 9.6 m³/h 3.6 … 9.6 m³/h	60 mm

1.3.5 Aliva 263 (dry / wet spraying)

Rotor size	Type / volume		Inside ø conveyor hose
10 l	Basic Speed I Basic Speed II Extended Speed I Extended Speed II Air	4.0 m³/h 6.0 m³/h 4.0 m³/h 6.0 m³/h 4.0 … 6.0 m³/h	60 mm
Hose rotor 16 l (method: only dry)	Basic Speed I Basic Speed II Extended Speed I Extended Speed II Air	5.5 m³/h 8.5 m³/h 5.5 m³/h 8.5 m³/h 5.5 … 8.5 m³/h	65 mm
16 l	Basic Speed I Basic Speed II Extended Speed I Extended Speed II Air	6.0 m³/h 9.5 m³/h 6.0 m³/h 9.5 m³/h 6.0 … 9.5 m³/h	65 mm
25 l	Basic Speed I Basic Speed II Extended Speed I Extended Speed II Air	10 m³/h 15 m³/h 10 m³/h 15 m³/h 10.0 … 15.0 m³/h	65 mm

1.3.6 Aliva 264 (dry / wet spraying)

Rotor size	Type / volume		Inside ø conveyor hose
18.5 l	Basic Speed I Basic Speed II	7.1 m³/h 10.7 m³/h	65 mm

1.3.7 Aliva 267 (dry / wet spraying)

Rotor size	Type / volume		Inside ø conveyor hose
15.5 l	Standard Adv.Speed I Adv.Speed II Top	9.0 m³/h 6.0 m³/h 9.0 m³/h 4.5 … 12.0 m³/h	65 mm
26.5 l	Standard Adv.Speed I Adv.Speed II Top	16.0 m³/h 10.0 m³/h 16.0 m³/h 8.0 … 21.0m³/h	65 mm

1.3.8 Aliva 285 (dry / wet spraying)

Rotor size	Type / volume		Inside ø conveyor hose
16 l	-	6.0 … 13.0 m³/h	65 mm
25 l	-	9.0 … 21.0 m³/h	65 mm

1.4 Performance / Output data

Details on the correct and efficient use of your machine are contained in the «Technical Data» chapter of the appropriate operating instructions.

There you can find the following diagrams, from which you can read-off or calculate the amounts to be conveyed, the conveying distance, air consumption, etc. You will also find a machine-specific example calculation of the air volume there.

1.4.1 Example calculation

We provide an example calculation here to show you how to calculate the air requirements.

Task 4 m^3/h dry mixture is to be conveyed 120 m; the selected hose diameter is 50/70 mm.

Basics
- Clean hose lines, curve radii min. 50 x NW.
- Moisture of dry mixture: max. 4%.
- Height above sea level 400 m.

Calculation

• Theoretical compressed air consumption	Approx. 9.8 m^3/min → 10 m^3/min (rounded off, because pneumatic supplies can not be calculated with 100% accuracy)
• Empty air resistance	approx. 1 bar
• Required pressure of supply air	**approx. 4.2 bar**

The intake air pressure must be at least 1 bar higher than the pressure of the supply air.

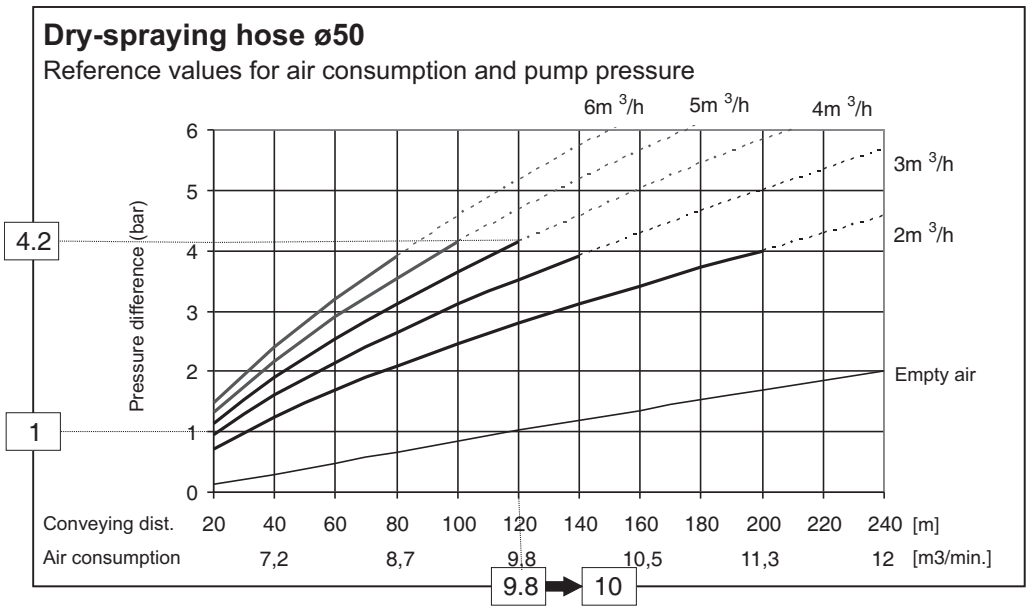

1.4.2 Dry spraying

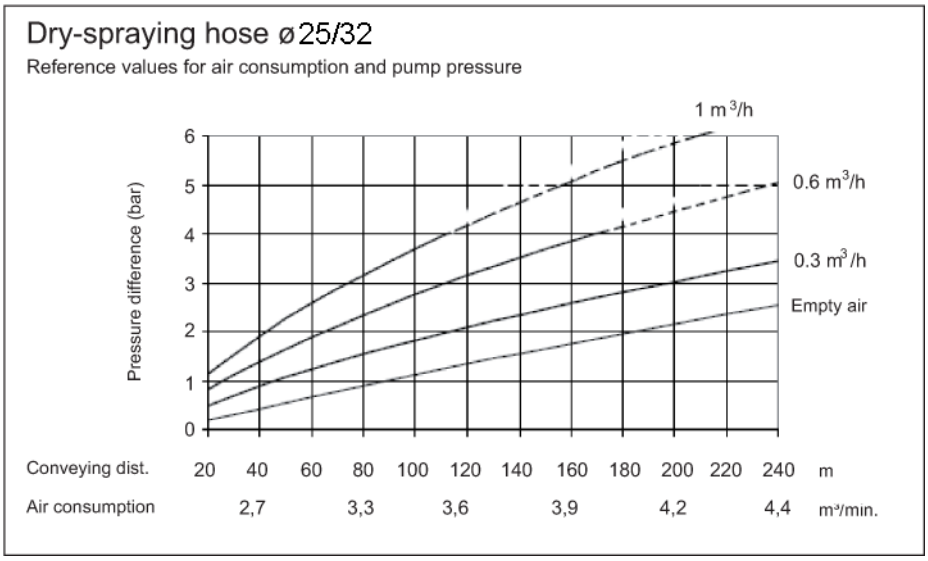

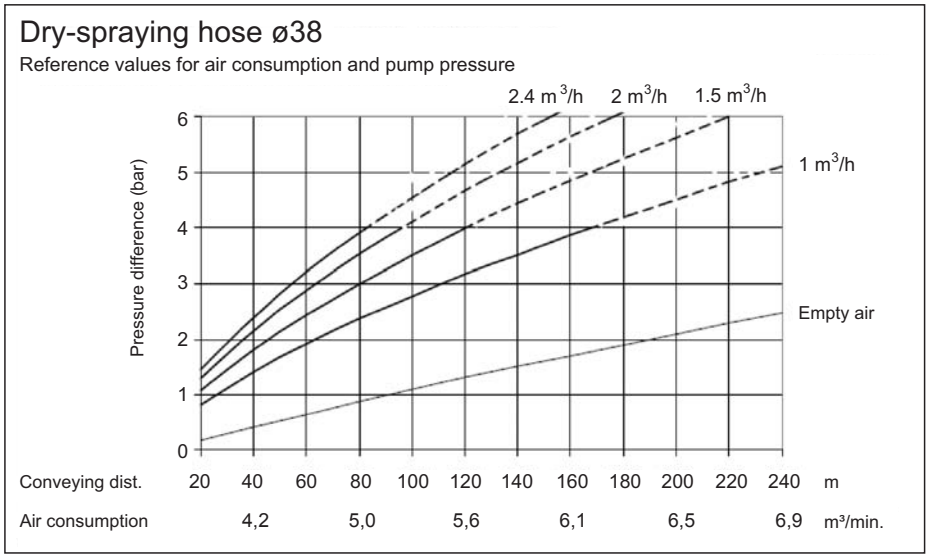

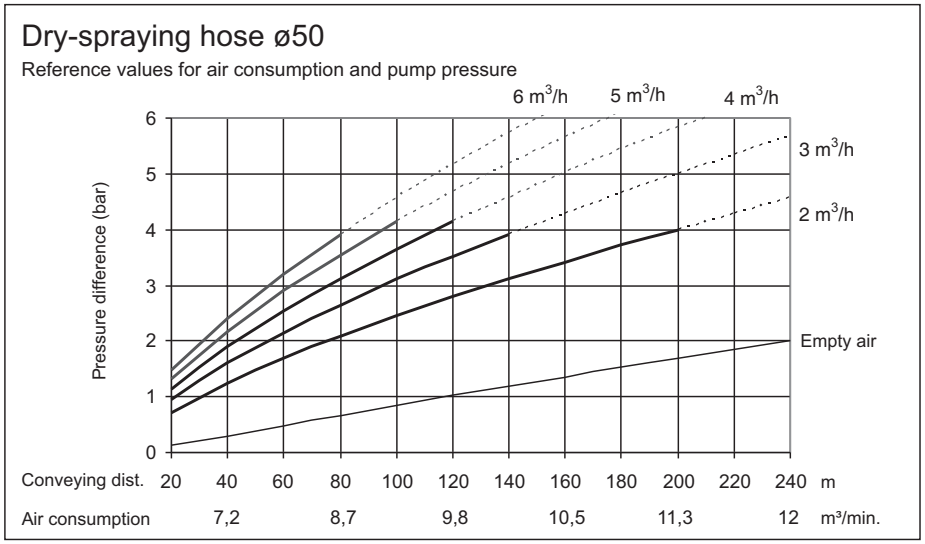

Dry-spraying hose ø60

Reference values for air consumption and pump pressure

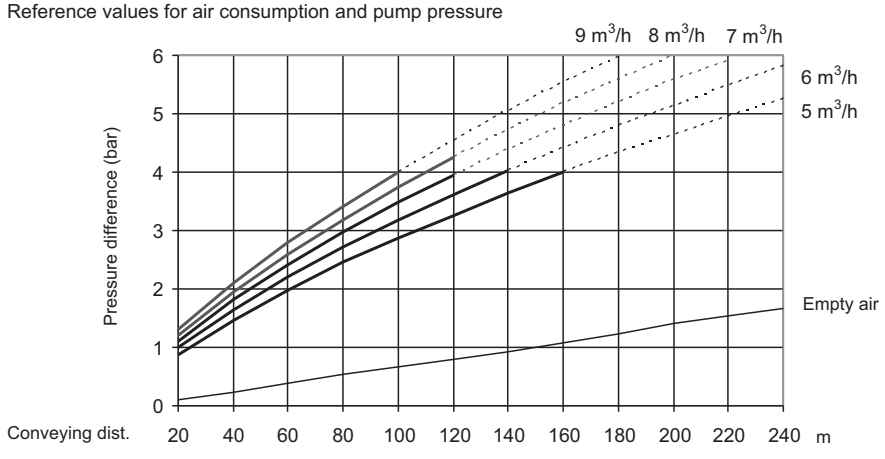

Conveying dist.	20	40	60	80	100	120	140	160	180	200	220	240	m
Air consumption		10		11,9		13,3		14,5		15,4		16,2	m³/min.

Dry-spraying hose ø65

Reference values for air consumption and pump pressure

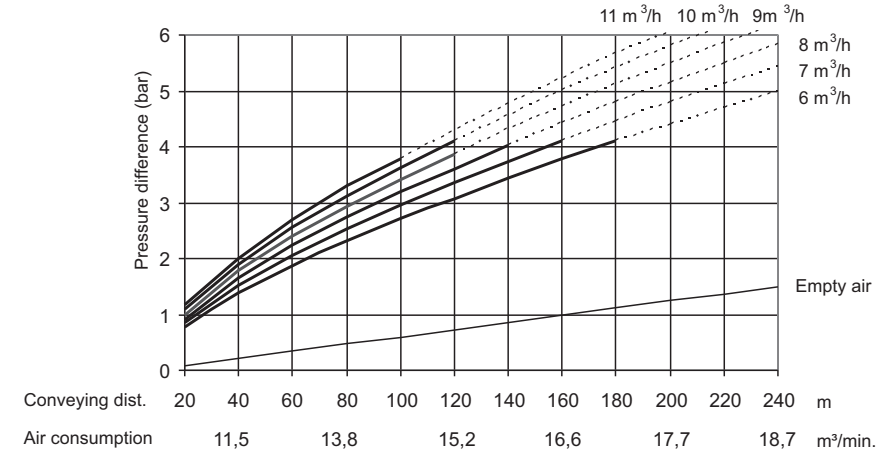

Conveying dist.	20	40	60	80	100	120	140	160	180	200	220	240	m
Air consumption		11,5		13,8		15,2		16,6		17,7		18,7	m³/min.

BUILDING TRUST

1.4.3 Wet spraying

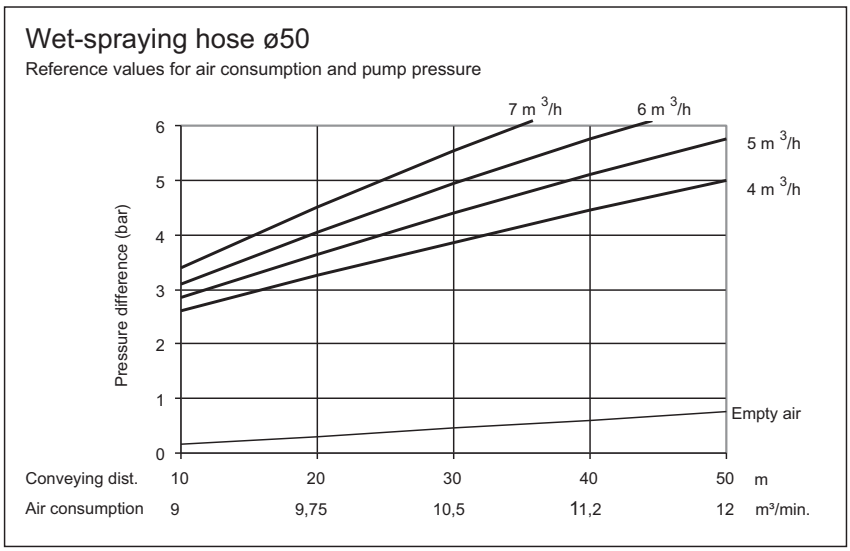

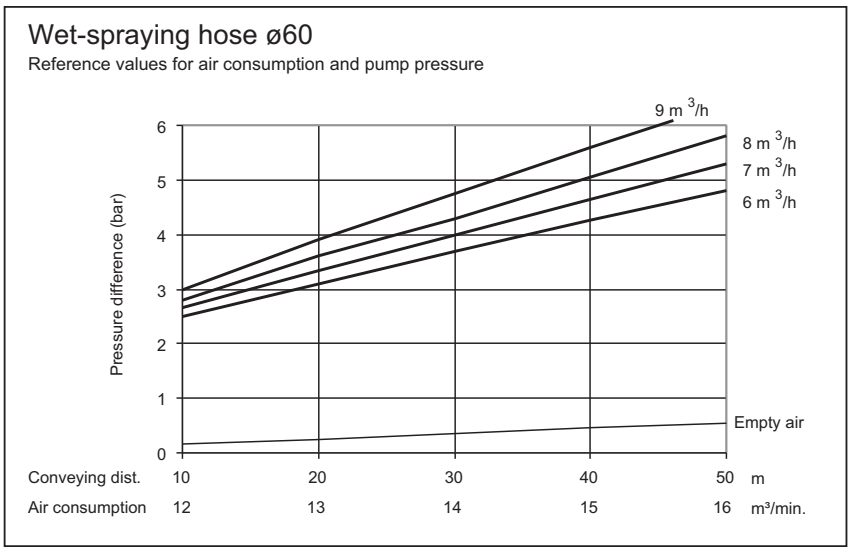

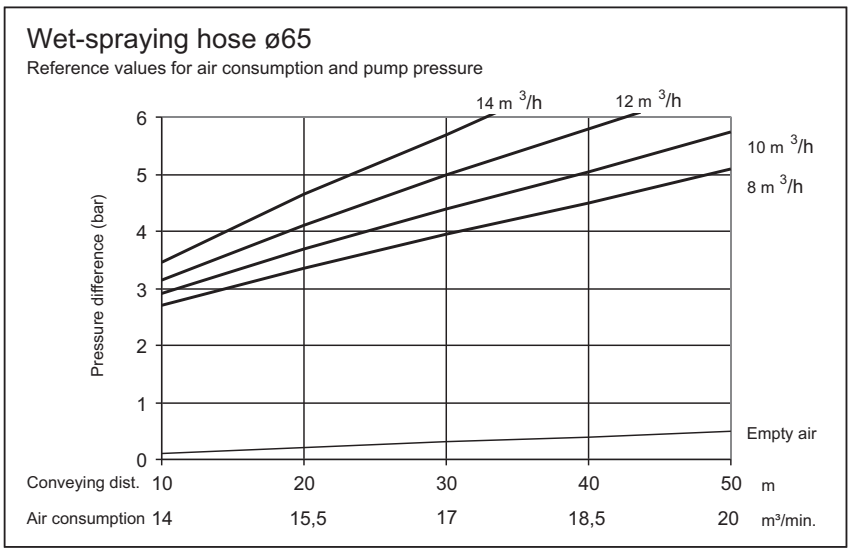

2 Safety instructions

⚠HAZARD

Basic considerations

Safety instructions contained in the respective operating and manitnenance instructions must be complied with thoroughly, even when related to accessories.

⚠HAZARD

Compressed air

Risk of death from compressed air

- Never open an air ball valve in an uncontrolled manner.
- Hold the conveyor hose and nozzle firmly before opening the air supply.
- Correct any problems only if the conveyor is turned off, the unit's feed line is shut off, the air supply is stopped, and the **air pressure and additive pressure have dropped to 0 bar** and the compressed air feed hose is removed.

⚠WARNING

Non-secured couplings

If couplings are not secured then they can open when conveying material.

- Always secure the couplings with linchpins to ensure they do not open when conveying material.

⚠WARNING

Caustic materials

The construction materials and additives used can cause severe injury.

- If construction materials or additives contact the skin, mouth or eyes, wash the affected area (eye/skin/clothes) for at least 15 minutes under flowing water. In case of contact with the eyes, counsult a doctor.

⚠ WARNING

Damage to health

Damage to health may occur due to the severe vibrations when conveying.

- A single person can convey a maximum of 6 m³/h concrete with a hand-operated spraying device.
- If the conveying rate is between 6 and 8 m³/h concrete, then the hand-operated spraying device must be operated by two persons.
- If the conveying rate is above 8 m³/h concrete then a telescopic spraying arm must be used.

2.1 Residual dangers

There are dangers associated with the use of technical products.

Dangers that can neither be eliminated by constructive measures (i.e. design features) nor by protective devices are residual dangers.

The safety instructions in these operating and maintenance instructions indicate the known residual dangers. If additional dangers become apparent during operation then the owner is obliged to communicate these to Sika Schweiz AG, Aliva Equipment, immediately.

3 Ordering instructions

3.1 Required information

To help the customer service of Sika Schweiz AG, Aliva Equipment, to serve you efficiently, we require the following information each time you order accessories or spare parts.

- Information on the **name plate of the conveyor**
  (For the position of the name plate, refer to the operating or maintenance instructions).
- **Inside diameters A1 and A2**, blow-off chamber and reduction cone
  (see *Thin stream overview on page 16*).
- **Use and procedure** compliant with the following table.

Use	Procedure	Admixture
Thin stream (rotor machine)	**Dry**	Water and/or fast reacting additives
	BackInlet	Water and/or slow reacting additives
	Wet	Additives (and compressed air)

3.2 Address for orders

Sika Schweiz AG
Aliva Equipment
Tüffenwies 16
CH-8048 Zürich
Schweiz

Contact
Telefon +41 58 436 32 22
Fax +41 58 436 41 40
www.aliva-equipment.com

3.3 Thin stream overview

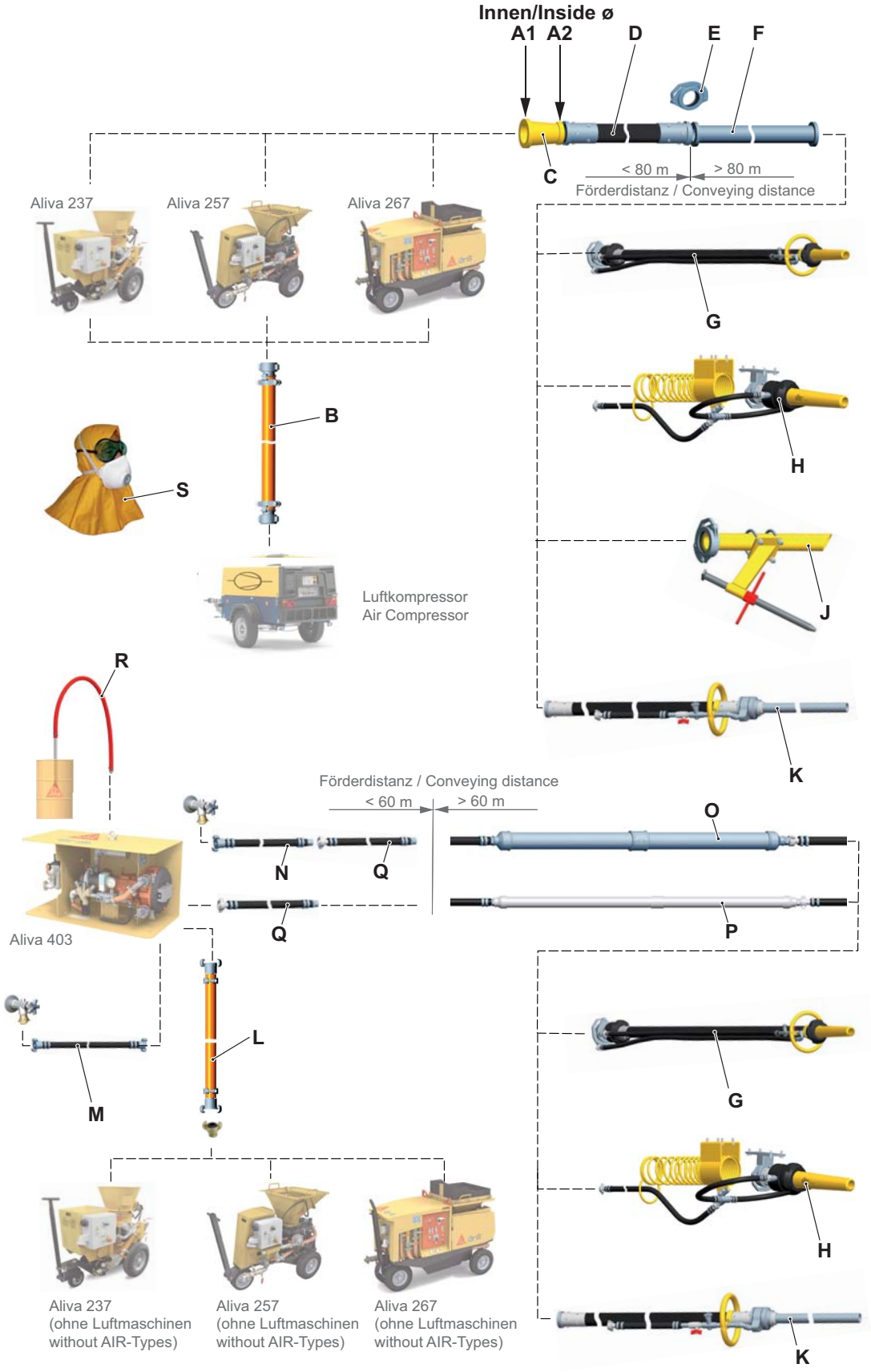

Rotor-machine Aliva	**Inside øA1**	**Inside øA2**				
	Side Blow-off chamber	**Inside Ø reduction cone**				
237	50	**-**	**-**	**(50)***	**38**	**32**
	38	**-**	**-**	**-**	**(38)***	**32**
252 / 257	60	**65**	**(60)***	**50**	**38**	**32**
264 / 267	75	**65**	**60**	**50**	**-**	**-**

* Reduction cone is not required **A1** = **A2**

- Determine the inside diameter **A1** (blow-off chamber).
- Determine the inside diameter **A2** (reduction cone).

✓ To find additional parts, the inside diameter **A2 is taken as the reference**.

- Determine the method
  (see *Chapter Ordering instructions on page 15*).

The appropriate accessories and/or spare parts are listed in the following chapters/ pages.

Item	Chapter / Page
B	*Compressor air hose on page 64*
C	*Reduction on page 18*
D	*Conveying hose on page 20*
E	*Coupling on page 28*
F	*Conveying pipe on page 26*
G	*Converto System manual - Thin stream on page 30*
H	*Converto System RoboSpray - Thin stream on page 50*
J	*Back-fill lance on page 62*
K	*Converto System refractory - Thin stream on page 56*
L	*Air hose, rotor machine - dispensing unit on page 66*
M	*Water hose - dispensing unit on page 68*
N	*Water hose, direct on page 70*
O	*Pipeline of water / compressed air on page 74*
P	*Pipeline for additives on page 76*
Q	*Additive / water hose on page 72*
R	*Suction hose for dispensing unit on page 78*
S	*Personal protection equipment on page 80*

4 Reduction

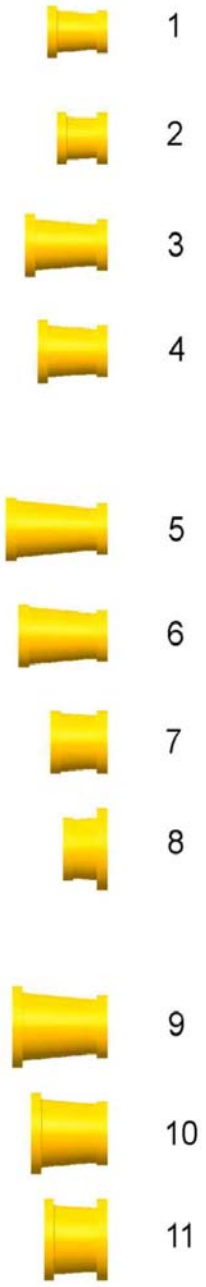

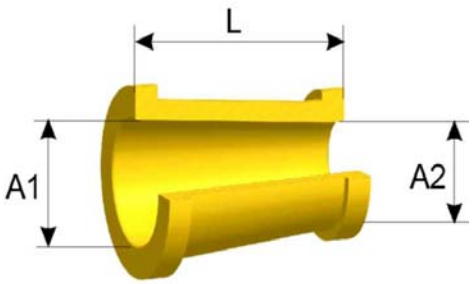

Reduction

Item	Part No.	Qty.	Unit	Description	ø A1-A2 (P.17)
1	303745	1	PC	Reduction (2 1/2"-2") L 95 mm	38-25
2	66283	1	PC	Reduction (2 1/2"-2 1/2") L 80 mm	38-32
3	138482	1	PC	Reduction (3"-2 1/2") L 130 mm	50-32
4	66294	1	PC	Reduction (3"-2 1/2") L 110 mm	50-38
5	315356	1	PC	Reduction (3"-2 1/2") L 160 mm	60-32
6	315357	1	PC	Reduction (3"-2 1/2") L 140 mm	60-38
7	66480	1	PC	Reduction (3"-3") L 90 mm	60-50
8	138483	1	PC	Reduction (4"-3") L 70 mm	65-60
9	66357	1	PC	Reduction (4"-3") L 150 mm	75-50
10	66498	1	PC	Reduction (4"-3") L 120 mm	75-60
11	66353	1	PC	Reduction (4"-4") L 100 mm	75-65

5 Conveying hose

5.1 Conveying hose, compl.

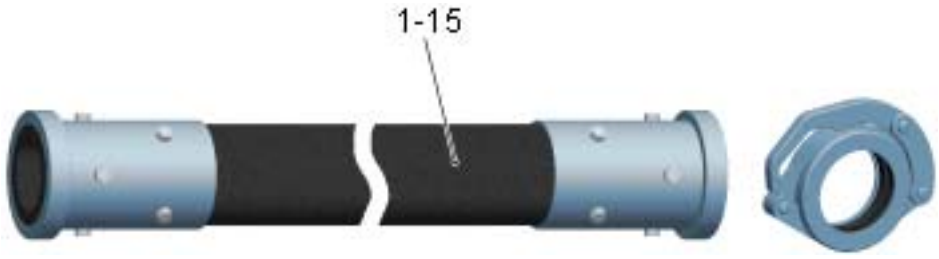

Conveying hose single parts, see *Conveying hose without coupling on page 22*

Conveying hose, compl.

Item	Part No.	Qty.	Unit	Description	øA2 (P.17)
1	318386	1	PC	Conveying hose cpl DN25 (2") L 10 m	25
2	318477	1	PC	Conveying hose cpl DN25 (2") L 20 m	25
3	138468	1	PC	Conveying hose cpl DN32 (2 1/2") L 10 m	32
4	66249	1	PC	Conveying hose cpl DN32 (2 1/2") L 20 m	32
5	138470	1	PC	Conveying hose cpl DN38 (2 1/2") L 10 m	38
6	66335	1	PC	Conveying hose cpl DN38 (2 1/2") L 20 m	38
7	317162	1	PC	Conveying hose cpl DN50 (3") L 2.5m	50
8	138472	1	PC	Conveying hose cpl DN50 (3") L 10 m	50
9	66336	1	PC	Conveying hose cpl DN50 (3") L 20 m	50
10	317163	1	PC	Conveying hose cpl DN60 (3") L 2.5m	60
11	138474	1	PC	Conveying hose cpl DN60 (3") L 10 m	60
12	66306	1	PC	Conveying hose cpl DN60 (3") L 20 m	60
13	317164	1	PC	Conveying hose cpl DN65 (3") L 2.5m	65
14	138476	1	PC	Conveying hose cpl DN65 (4") L 10 m	65
15	66345	1	PC	Conveying hose cpl DN65 (4") L 20 m	65

5.2 Conveying hose without coupling

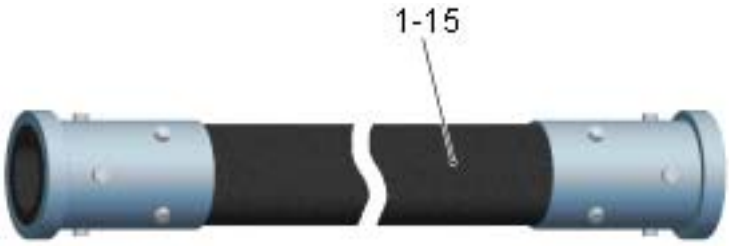

Conveying hose without coupling

Item	Part No.	Qty.	Unit	Description	øA2 (P.17)
1	318668	1	PC	Conveying hose DN25 10m 2"	25
2	318669	1	PC	Conveying hose DN25 20m 2"	25
3	318670	1	PC	Conveying hose DN32 10m 2 1/2"	32
4	318671	1	PC	Conveying hose DN32 20m 2 1/2"	32
5	318672	1	PC	Conveying hose DN38 10m 2 1/2"	38
6	318673	1	PC	Conveying hose DN38 20m 2 1/2"	38
7	318674	1	PC	Conveying hose DN50 2.5m 3"	50
8	318675	1	PC	Conveying hose DN50 10m 3"	50
9	318605	1	PC	Conveying hose DN50 20m 3"	50
10	318676	1	PC	Conveying hose DN60 2.5m 3"	60
11	318677	1	PC	Conveying hose DN60 10m 3"	60
12	318678	1	PC	Conveying hose DN60 20m 3"	60
13	318679	1	PC	Conveying hose DN65 2.5m 4"	65
14	318680	1	PC	Conveying hose DN65 10m 4"	65
15	318681	1	PC	Conveying hose DN65 20m 4"	65

5.3 Conveying hose, single parts

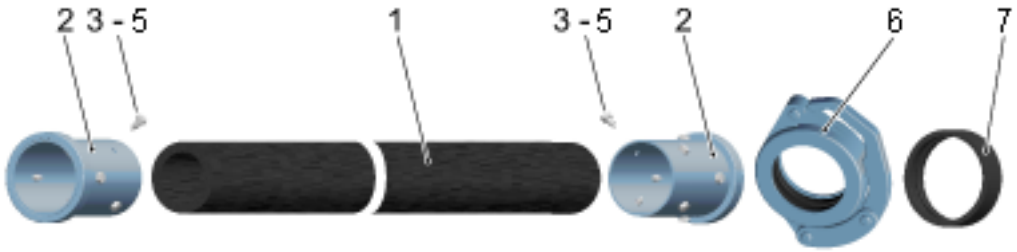

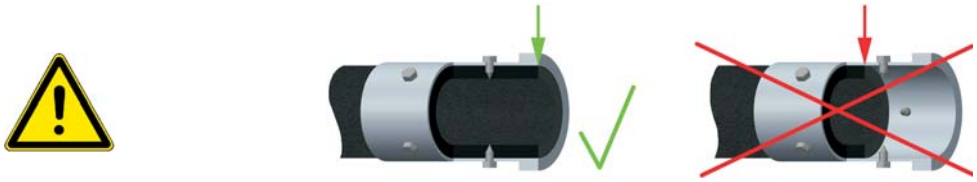

NOTE

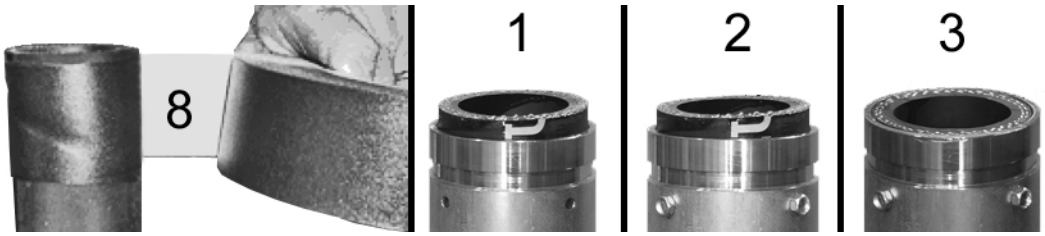

If there is space between the **conveying hose** and the **hose casing** it is to compesate with tape **Pos. 8** or an equivalent tape. Only one width of tape.

Hose casing must be slid over the hose without any space.

1. Hose casing has to be mounted on the conveying hose with an over lay of 10-15mm.

2. Screw tight the hose casing with conveying hose.

3. Over lay of hose has to be cut off evenly to be level with hose casing.

Conveying hose, single parts

Item	Part No.	Qty.	Unit	Description	øA2 (P.17)
1	145466	10	M	Conveying hose Ø25/40	25
1	145466	20	M	Conveying hose Ø25/40	25
1	145444	10	M	Conveying hose Ø32/52	32
1	145444	20	M	Conveying hose Ø32/52	32
1	145445	10	M	Conveying hose Ø38/58	38
1	145445	20	M	Conveying hose Ø38/58	38
1	145447	10	M	Conveying hose Ø50/70	50
1	145447	20	M	Conveying hose Ø50/70	50
1	145448	10	M	Conveying hose Ø60/80	60
1	145448	20	M	Conveying hose Ø60/80	60
1	145462	10	M	Conveying hose Ø65/85	65
1	145462	20	M	Conveying hose Ø65/85	65
2	138466	2	PC	Hose casing DN25 (2")	25
2	182590	2	PC	Hose casing DN32 (2 1/2")	32
2	312525	2	PC	Hose casing DN38 (2 1/2")	38
2	179975	2	PC	Hose casing DN50 (3")	50
2	312538	2	PC	Hose casing DN60 (3")	60
2	312500	2	PC	Hose casing DN65 (4")	65
3	146157	16	PC	Sheet-metal screw hex D4.8x9 zincked	25
4	66569	16	PC	Sheet-metal screw hex D6.3x16 zincked	32,60
5	146159	16	PC	Sheet metal screw hex D6.3x13 zincked	38,50,65
6	66654	1	PC	Coupling cpl. 2"C(GF20G+GU)	25
6	66908	1	PC	Coupling cpl. 2 1/2"C(GF25G+GU)	32,38
6	66927	1	PC	Coupling cpl. 3"C (GF30G+GU)	50,60
6	66893	1	PC	Coupling cpl. 4"C (GF40M+GU)	65
7	66655	1	PC	Sealing ring 2"C	25
7	66926	1	PC	Sealing ring 2 1/2"C	32,38
7	66933	1	PC	Sealing ring 3"C	50,60
7	66922	1	PC	Sealing ring 4"C	65
8	319003	1	PC	Sealing tape conveying hose	

6 Conveying pipe

6.1 Conveying pipe, compl.

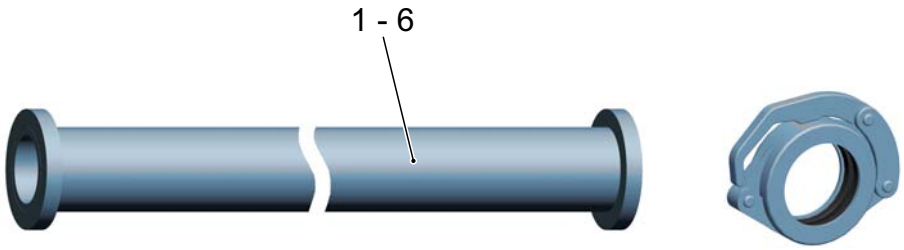

6.2 Conveying pipe, single parts

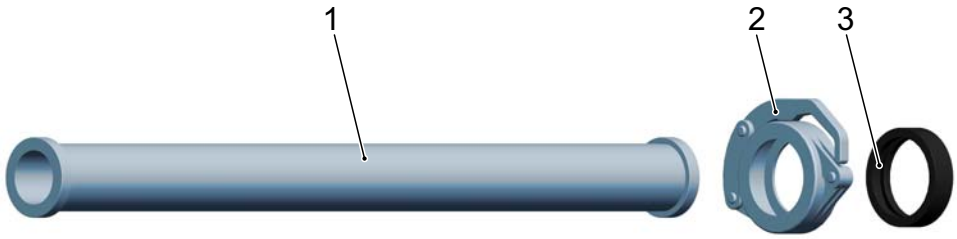

Conveying pipe, compl.

Item	Part No.	Qty.	Unit	Description	øA2 (P.17)
1	315436	1	PC	Conveying pipe steel cpl length 3 m DN50	50
2	315435	1	PC	Conveying pipe steel cpl length 6 m DN50	50
3	315438	1	PC	Conveying pipe steel cpl length 3 m DN60	60
4	315437	1	PC	Conveying pipe steel cpl length 6 m DN60	60
5	315441	1	PC	Conveying pipe steel cpl length 3 m DN65	65
6	315439	1	PC	Conveying pipe steel cpl length 6 m DN65	65

Conveying pipe, single parts

Item	Part No.	Qty.	Unit	Description	øA2 (P.17)
1	315433	1	PC	Conveying pipe steel length 3 m DN50	50
1	315431	1	PC	Conveying pipe steel length 6 m DN50	50
1	315428	1	PC	Conveying pipe steel length 3 m DN60	60
1	315425	1	PC	Conveying pipe steel length 6 m DN60	60
1	315265	1	PC	Conveying pipe steel length 3 m DN65	65
1	315264	1	PC	Conveying pipe steel length 6 m DN65	65
2	66927	1	PC	Coupling cpl. 3"C (GF30G+GU)	50/60
2	66893	1	PC	Coupling cpl. 4"C (GF40M+GU)	65
3	66933	1	PC	Sealing ring 3"C	50/60
3	66922	1	PC	Sealing ring 4"C	65

7 Coupling

7.1 Coupling, compl.

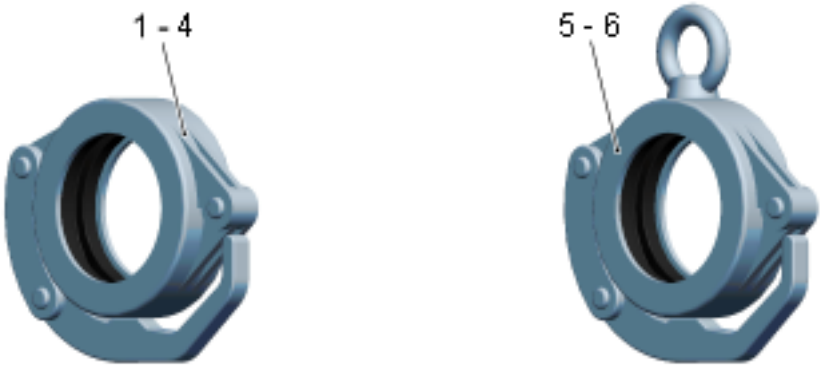

7.2 Coupling, single parts

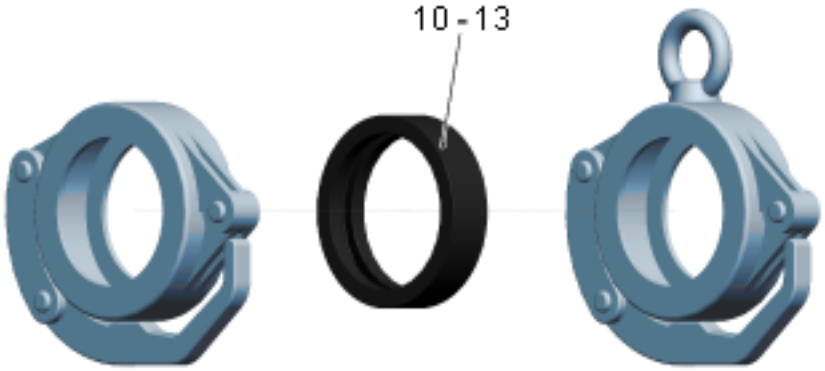

Coupling, compl.

Item	Part No.	Qty.	Unit	Description	ø Flange	øA2 (P.17)
1	66654	1	ST	Coupling cpl. 2"C (GF20G+GU)	60	25
2	66908	1	PC	Coupling cpl. 2 1/2"C(GF25G+GU)	73	32,38
3	66927	1	PC	Coupling cpl. 3"C (GF30G+GU)	89	50,60
4	66893	1	PC	Coupling cpl. 4"C (GF40M+GU)	114	65
5	138460	1	PC	Coupling with eye cpl. 3" (GF30G	89	50,60
6	138461	1	PC	Coupling with eye cpl. 4" (GF40G	114	65

Coupling, single parts

Item	Part No.	Qty.	Unit	Description	ø Flange	øA2 (P.17)
10	66655	1	ST	Sealing ring 2"C	60	25
11	66926	1	PC	Sealing ring 2 1/2"C	73	32,38
12	66933	1	PC	Sealing ring 3"C	89	50,60
13	66922	1	PC	Sealing ring 4"C	114	65

8 Converto System manual - Thin stream

8.1 Converto System Repro

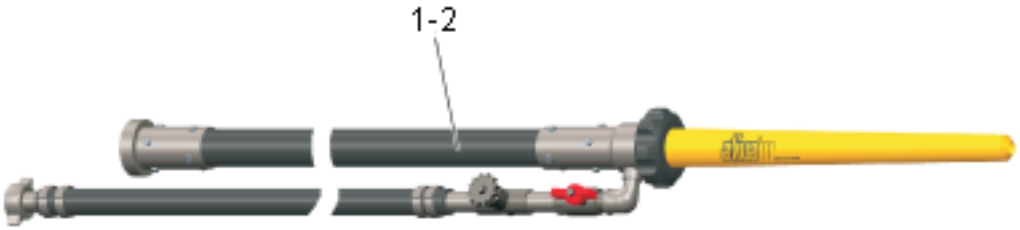

8.2 Converto System ReproFlex

Converto System Repro

Item	Part No.	Qty.	Unit	Description	øA2 (P.17)
1	318371	1	PC	Converto System Repro DN25 L 5m	25
2	318901	1	PC	Converto System Repro DN25 L20m	25

Converto System ReproFlex

Item	Part No.	Qty.	Unit	Description	øA2 (P.17)
1	312711	1	PC	Converto System ReproFlex DN32-D18	32
2	315165	1	PC	Converto System ReproFlex DN32-D27	32

8.3 Converto System dry / wet

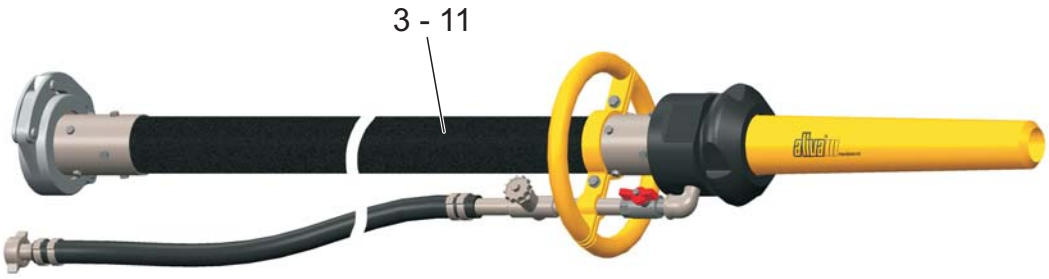

8.4 Converto Sytem BackInlet

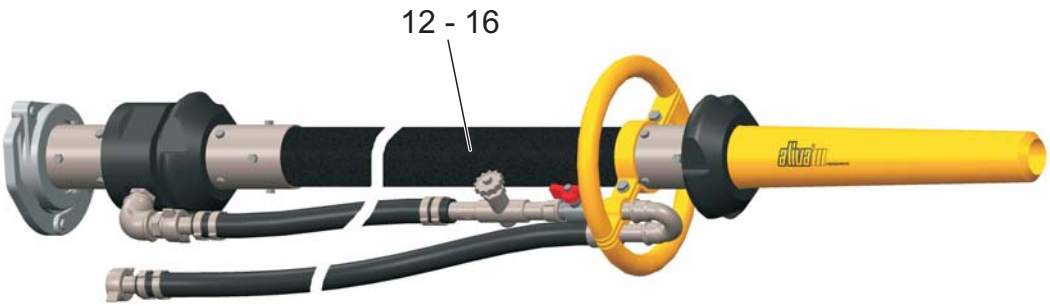

8.5 Converto System wet

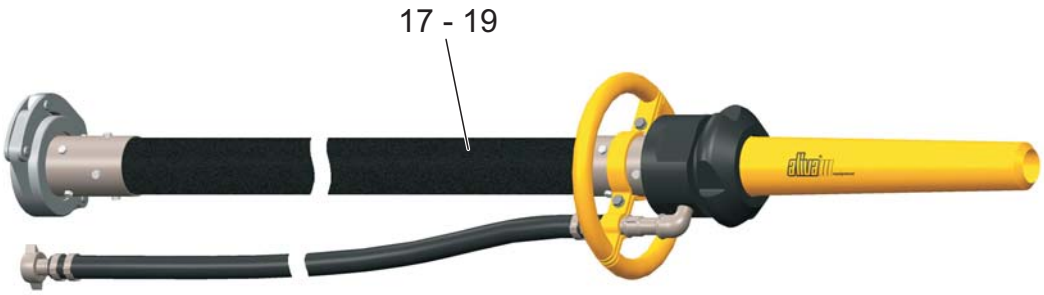

Converto System dry

Item	Part No.	Qty.	Unit	Description	øA2 (P.17)
3	315164	1	PC	Converto System dry DN32-D18	32
4	182539	1	PC	Converto System dry DN32-D27	32
5	312673	1	PC	Converto System dry DN38	38
6	181268	1	PC	Converto System dry DN50	50
7	312678	1	PC	Converto System dry DN60	60
8	312679	1	PC	Converto System dry DN65	65

Converto System wet / dry

Item	Part No.	Qty.	Unit	Description	øA2 (P.17)
9	316766	1	ST	Converto System dry/wet DN50	50
10	316767	1	ST	Converto System dry/wet DN60	60
11	316768	1	ST	Converto System dry/wet DN65	65

Converto System BackInlet

Item	Part No.	Qty.	Unit	Description	øA2 (P.17)
12	182540	1	PC	Converto System BackInlet DN32	32
13	312521	1	PC	Converto System BackInlet DN38	38
14	180070	1	PC	Converto System BackInlet DN50	50
15	312530	1	PC	Converto System BackInlet DN60	60
16	312501	1	PC	Converto System BackInlet DN65	65

Converto System wet

Item	Part No.	Qty.	Unit	Description	øA2 (P.17)
17	312973	1	PC	Converto System wet DN50	50
18	312976	1	PC	Converto System wet DN60	60
19	312977	1	PC	Converto System wet DN65	65

8.6 Converto Repro

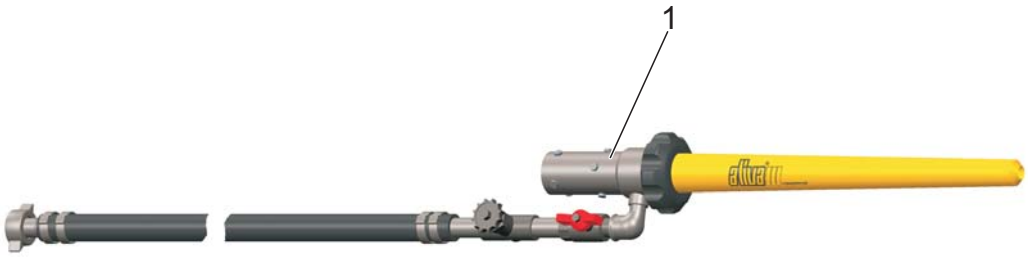

8.7 Converto ReproFlex

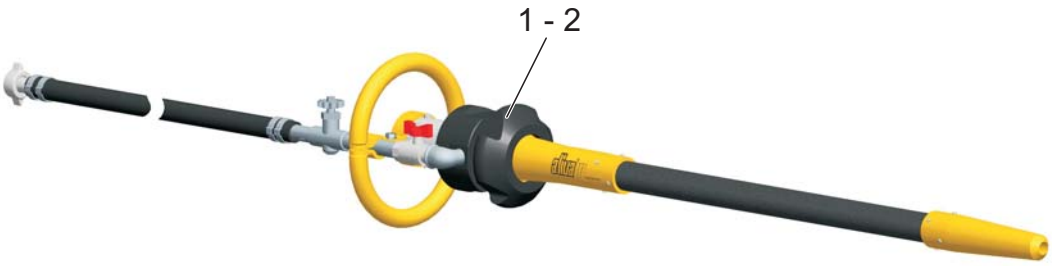

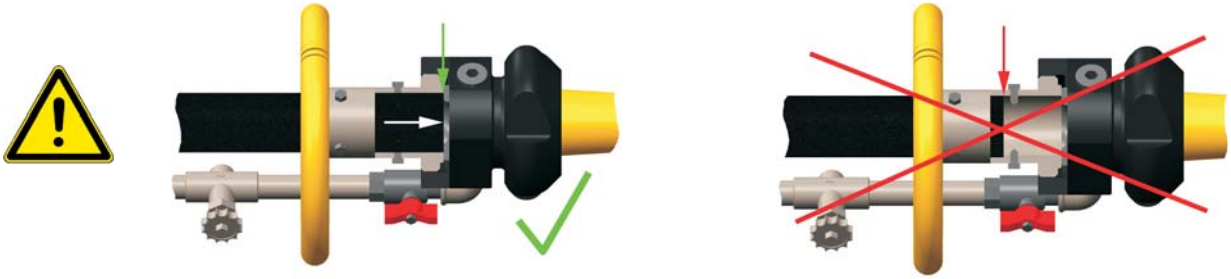

NOTE
If there is space between the **conveying hose** and the **hose casing** it is to com-pensate with tape, **see page 24.**

Converto Repro

Item	Part No.	Qty.	Unit	Description	øA2 (P.17)
1	318462	1	PC	Converto Repro DN25	25

Converto ReproFlex

Item	Part No.	Qty.	Unit	Description	øA2 (P.17)
1	316666	1	PC	Converto ReproFlex DN32-D18	32
2	316667	1	PC	Converto ReproFlex DN32-D27	32

8.8 Converto dry

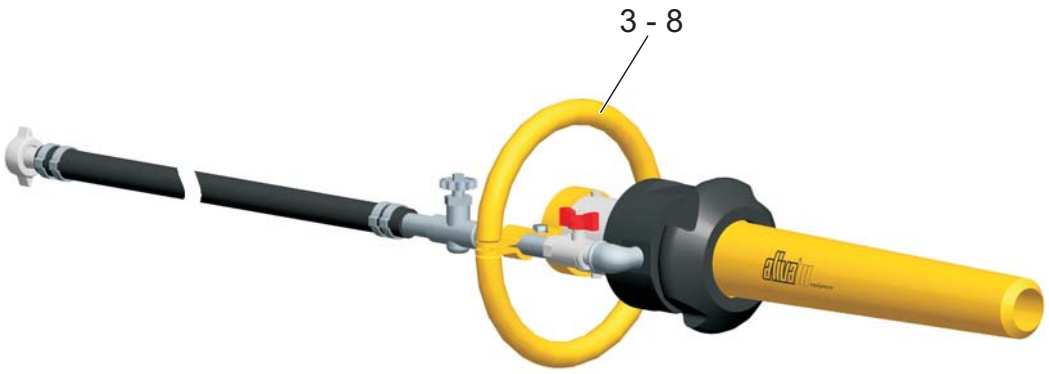

8.9 Converto wet

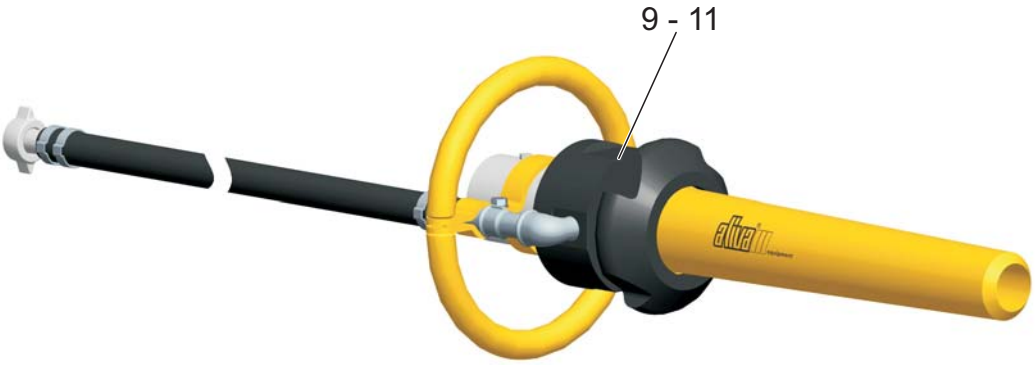

NOTE
If there is space between the **conveying hose** and the **hose casing** it is to com-pensate with tape, **see page 24.**

Converto dry

Item	Part No.	Qty.	Unit	Description	øA2 (P.17)
3	316668	1	PC	Converto dry DN32-D18	32
4	316669	1	PC	Converto dry DN32-D27	32
5	316670	1	PC	Converto dry DN38	38
6	316671	1	PC	Converto dry DN50	50
7	316672	1	PC	Converto dry DN60	60
8	316673	1	PC	Converto dry DN65	65

Converto wet

Item	Part No.	Qty.	Unit	Description	øA2 (P.17)
9	316674	1	PC	Converto wet DN50	50
10	316675	1	PC	Converto wet DN60	60
11	316676	1	PC	Converto wet DN65	65

8.10 Converto System Repro, single parts DN25

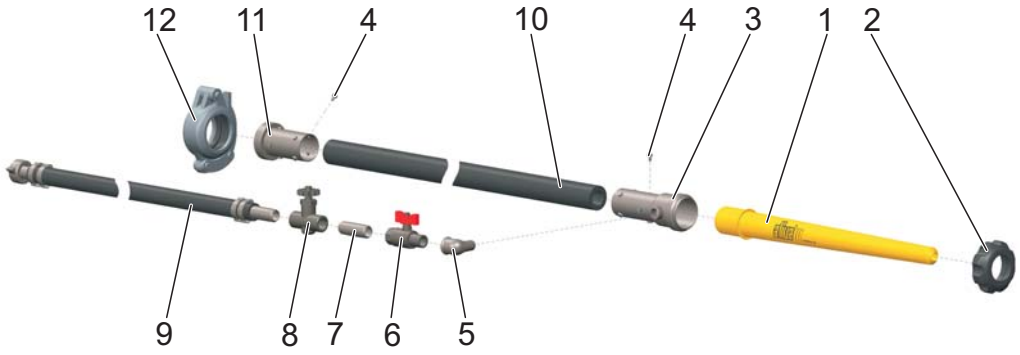

Converto System Repro, single parts DN25

Item	Part No.	Qty.	Unit	Decription
1	318404	1	PC	Spray nozzle D14 DN25/2"
2	318409	1	PC	Swivel nut DN25/Rd60
3	318372	1	PC	Inlet housing DN25/Rd60
4	146157	16	PC	Sheet metal screw hexagonal d 4.8x9
5	143701	1	PC	GF 92 angle red. 1/2"IG-3/8"AG zincked
6	180786	1	PC	Ball cock 1/2" AG/IG MS/PTFE
7	143961	1	PC	GF530 pipe nipple 1/2"-60 zincked
8	66867	1	PC	Needle valve 1/2" metallic handwheel
9	316706	1	PC	Hose D15/19 L=0.5 1/2"AG-Cone 3/4"
9	316649	1	PC	Hose D15/19 L=5.0 1/2"AG-Cone 3/4"
10	318381	1	PC	Conveying hose DN25 L5.0m
10	318902	1	PC	Conveying hose DN25 L20.0m
11	138466	1	PC	Hose casing DN25/2"
12	66654	1	PC	Coupling cpl. 2"C (GF20G+GU)

8.11 Converto System dry, single parts DN32

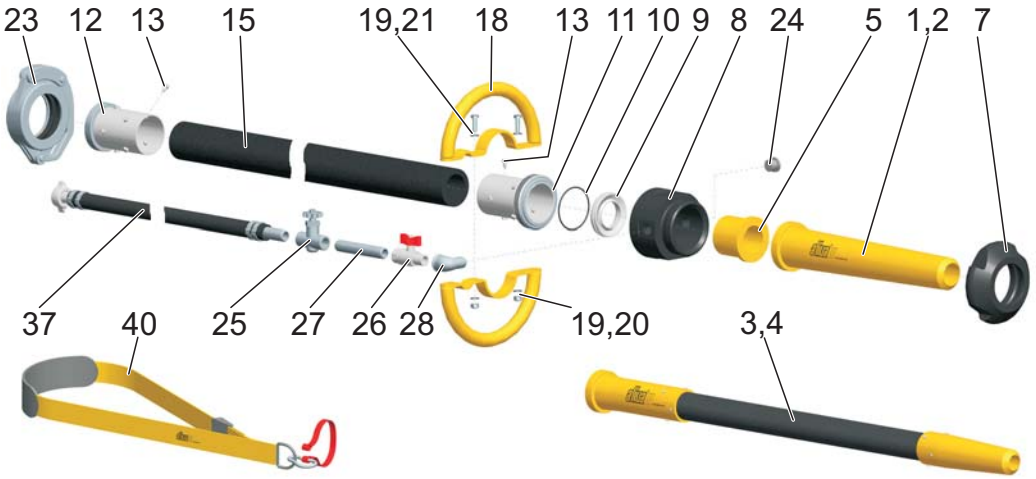

8.12 Converto System BackInlet, single parts DN32

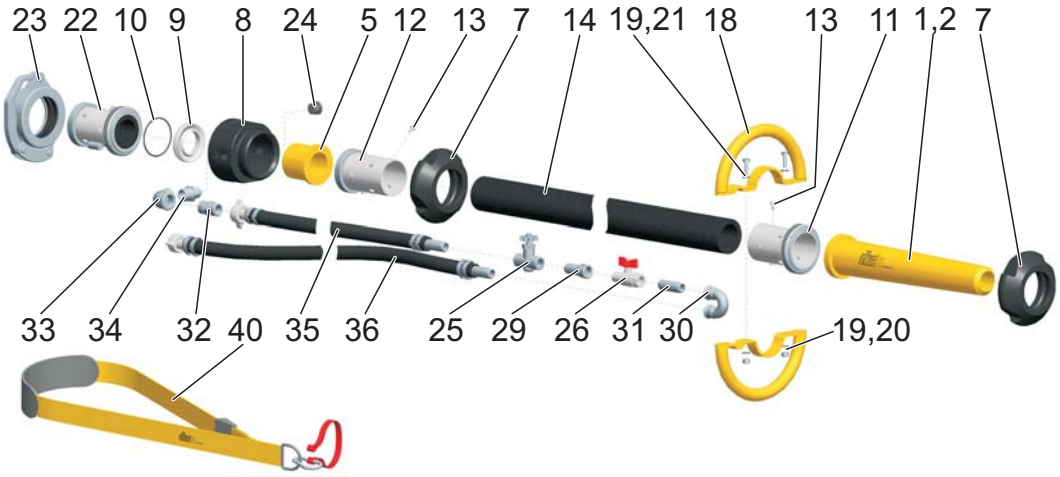

Converto System dry / BackInlet, single parts DN32

Item	Part No.	Qty.	Unit	Description
1	182932	1	PC	Spray nozzle D18 DN38/2 1/2"
2	312522	1	PC	Spray nozzle D27 DN38/2 1/2"
3	182934	1	PC	Spray nozzle D18Flex 1m DN38/2 1/2"
4	312891	1	PC	Spray nozzle D27Flex 1m DN38/2 1/2"
5	315157	1	PC	Water ring yellow/dry DN32/38
7	182598	1	PC	Swivel nut DN32/38/Rd85
8	182599	1	PC	Inlet housing DN32/38/D60
9	316486	1	PC	Wearring DN32/38
10	144263	1	PC	O-ring 57.00x4.00mm NBR 70
11	182573	1	PC	Hose casing thread DN32/Rd85
12	182590	1	PC	Hose casing DN32/2 1/2"
13	66569	16	PC	Sheet-metal screw hex D6.3x16 zincked
14	182575	1	PC	Conveying hose DN32 L2.5m
15	311950	1	PC	Conveying hose DN32 L5.0m
18	182712	2	PC	Handhold spray device DN32/38
19	145970	4	PC	Disc M8/16x1,5 zincked BN715
20	146133	2	PC	Counter-nut M8 cl. 8 zinck. BN161
21	145631	2	PC	Hexagonal screw M8×25 8.8 BN56
22	312569	1	PC	Coupling hose DN32 Rd85/2 1/2"
23	66908	1	PC	Coupling cpl. 2 1/2"C (GF25G+GU)
24	167262	1	PC	EO-screw connexion VSTI R 1/2"-ED CF
25	66867	1	PC	Needle valve 1/2" metallic handwheel
26	180786	1	PC	Ball cock 1/2" AG/IG MS/PTFE
27	301579	1	PC	GF530 pipe nipple 1/2"-120 zincked
28	66789	1	PC	GF92 angle 90° 1/2" zincked
29	301457	1	PC	GF526 extension 1/2"-60 zincked
30	182713	1	PC	GF60 double bend 1/2" zincked
31	143961	1	PC	GF530 pipe nipple 1/2"-60 zincked
32	116235	1	PC	Double nipple KK3/4" - KK3/4" zincked
33	116237	1	PC	GF90 angle 3/4" zincked
34	143849	1	PC	GF245 double nipple reduction 3/4"-1/2"
35	181383	1	PC	Hose D15/19 L=2.18 1/2"AG-Cone 3/4"
36	180785	1	PC	Hose D15/19 L=2.5 1/2" AG-Cone 3/4"
37	316649	1	PC	Hose D15/19 L=5.0 1/2"AG-Cone 3/4"
40	312736	1	PC	Carrying strap

8.13 Converto System dry, single parts DN38

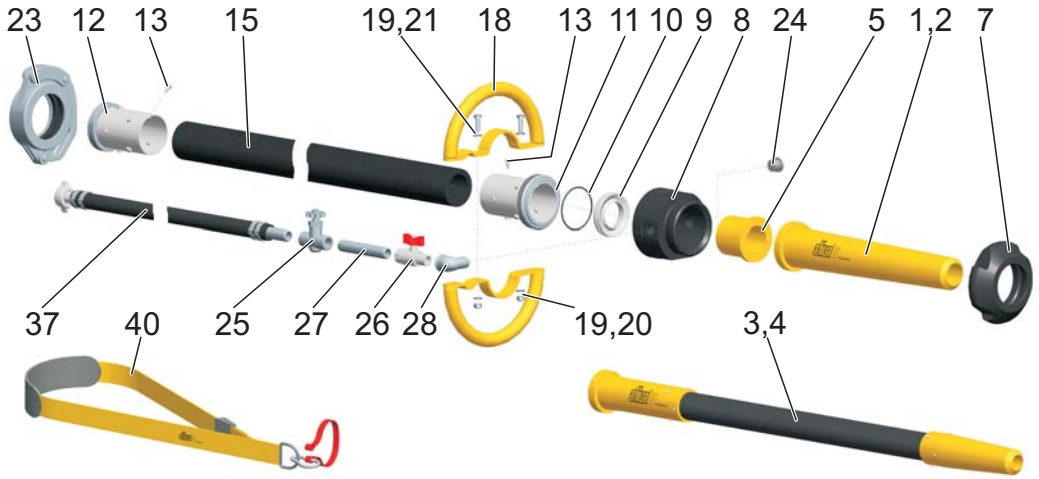

8.14 Converto System BackInlet, single parts DN38

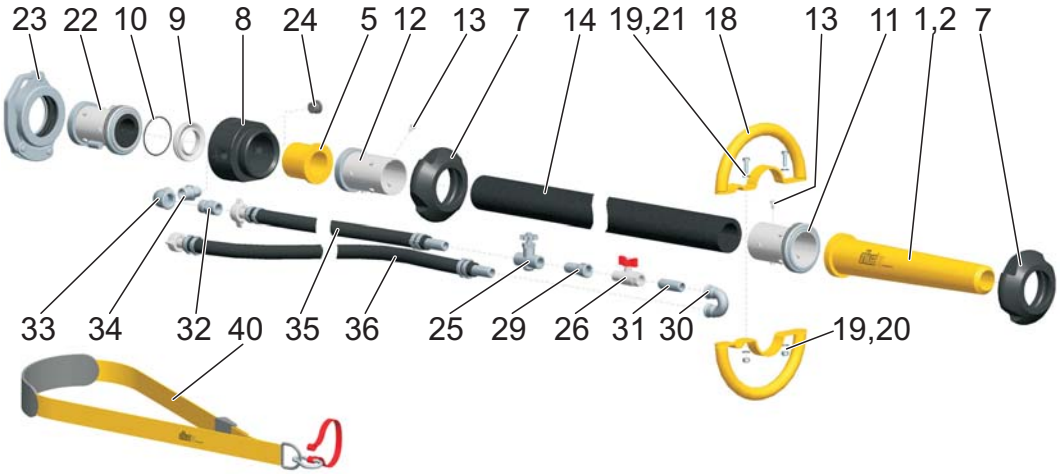

Converto System dry / BackInlet, single parts DN38

Item	Part No.	Qty.	Unit	Decription
1	182932	1	PC	Spray nozzle D18 DN38/2 1/2"
2	312522	1	PC	Spray nozzle D27 DN32/2 1/2"
3	182934	1	PC	Spray nozzle D18Flex 1m DN38/2 1/2"
4	312891	1	PC	Spray nozzle D27Flex 1m DN38/2 1/2"
5	315157	1	PC	Water ring yellow/dry DN32/38
7	182598	1	PC	Swivel nut DN32/38/Rd85
8	182599	1	PC	Inlet housing DN32/38/D60
9	316486	1	PC	Wearring DN32/38
10	144263	1	PC	O-ring 57.00x4.00mm NBR 70
11	312524	1	PC	Hose casing threaded DN38/Rd85
12	312525	1	PC	Hose casing DN38/2 1/2"
13	146159	16	PC	Sheet metal screw hex D6.3x13 zincked
14	312674	1	PC	Conveying hose DN38 L2.5m
15	312523	1	PC	Conveying hose DN38 L5.0m
18	182712	2	PC	Handhold spray device DN32/38
19	145970	4	PC	Disc M8/16x1,5 zincked BN715
20	146133	2	PC	Counter-nut M8 cl. 8 zinck. BN161
21	145631	2	PC	Hexagonal screw M8×25 8.8 BN56
22	312581	1	PC	Coupling hose DN38 Rd85/2 1/2"
23	66908	1	PC	Coupling cpl. 2 1/2"C (GF25G+GU)
24	167262	1	PC	EO-screw connexion VSTI R 1/2"-ED CF
25	66867	1	PC	Needle valve 1/2" metallic handwheel
26	180786	1	PC	Ball cock 1/2" AG/IG MS/PTFE
27	301579	1	PC	GF530 pipe nipple 1/2"-120 zincked
28	66789	1	PC	GF92 angle 90° 1/2" zincked
29	301457	1	PC	GF526 extension 1/2"-60 zincked
30	182713	1	PC	GF60 double bend 1/2" zincked
31	143961	1	PC	GF530 pipe nipple 1/2"-60 zincked
32	116235	1	PC	Double nipple KK3/4" - KK3/4" zincked
33	116237	1	PC	GF90 angle 3/4" zincked
34	143849	1	PC	GF245 double nipple reduction 3/4"-1/2"
35	181383	1	PC	Hose D15/19 L=2.18 1/2"AG-Cone 3/4"
36	180785	1	PC	Hose D15/19 L=2.5 1/2" AG-Cone 3/4"
37	316649	1	PC	Hose D15/19 L=5.0 1/2"AG-Cone 3/4"
40	312736	1	PC	Carrying strap

8.15 Converto System dry, single parts DN50

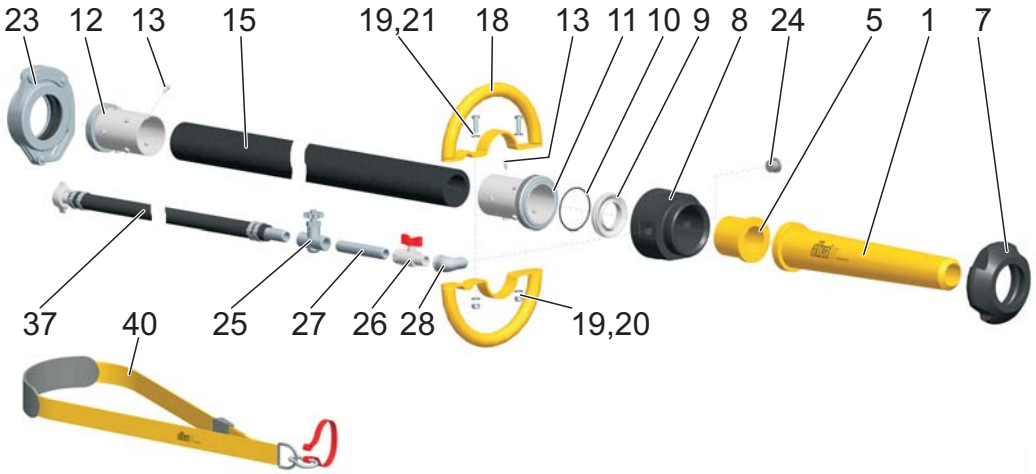

8.16 Converto System BackInlet, single parts DN50

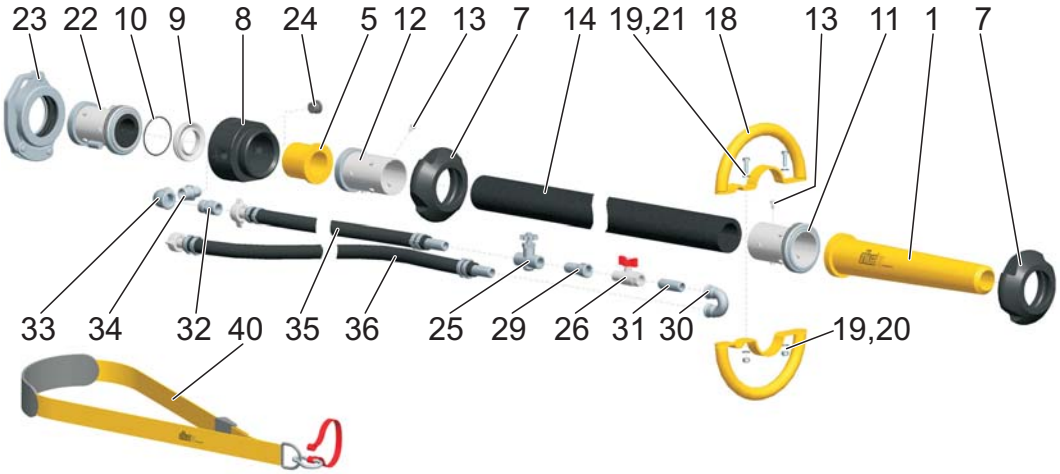

8.17 Converto System wet, single parts DN50

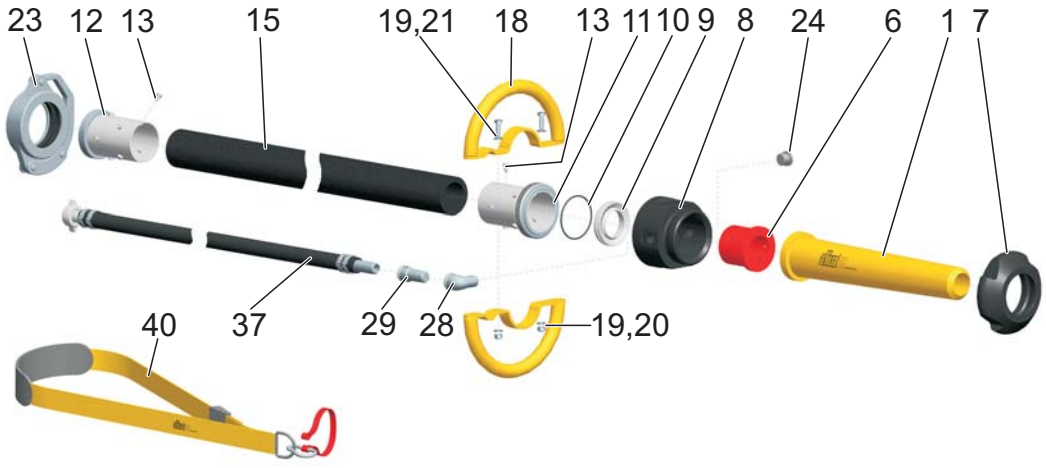

BUILDING TRUST

Converto System dry / BackInlet / wet, single parts DN50

Item	Part No.	Qty.	Unit	Decription	
1	179896	1	PC	Spray nozzle	DN50/3"
5	315152	1	PC	Water ring yellow/dry	DN50
6	313033	1	PC	Water ring red/wet	DN50
7	312421	1	PC	Swivel nut	DN50/Rd100
8	312423	1	PC	Inlet housing	DN50/D77
9	316277	1	PC	Wearring	DN50
10	144255	1	PC	O-ring 73.00x3.00mm NBR 70	
11	179973	1	PC	Hose casing thread	DN50/Rd100
12	179975	1	PC	Hose casing	DN50/3"
13	146159	16	PC	Sheet metal screw hex D6.3x13 zincked	
14	181541	1	PC	Conveying hose DN50 L2.5m	
15	180007	1	PC	Conveying hose DN50 L5.0m	
18	179995	2	PC	Handhold spray device	DN50
19	145970	4	PC	Disc M8/16x1,5 zincked BN715	
20	146133	2	PC	Counter-nut M8 cl. 8 zinck. BN161	
21	145631	2	PC	Hexagonal screw M8×25 8.8 BN56	
22	312544	1	PC	Coupling hose DN50	Rd100/3"
23	66927	1	PC	Coupling cpl. 3"	(GF30G+GU)
24	167262	1	PC	GF530 pipe nipple 1/2"-120 zinc.	
25	66867	1	PC	Needle valve 1/2" metallic handwheel	
26	180786	1	PC	Ball cock 1/2" AG/IG MS/PTFE	
27	301579	1	PC	GF530 pipe nipple 1/2"-120 zincked	
28	66789	1	PC	GF92 angle 90° 1/2" zincked	
29	301457	1	PC	GF526 extension 1/2"-60 zincked	
30	182713	1	PC	GF60 double bend 1/2" zincked	
31	143961	1	PC	GF530 pipe nipple 1/2"-60 zincked	
32	116235	1	PC	Double nipple KK3/4" - KK3/4" zincked	
33	116237	1	PC	GF90 angle 3/4"zincked	
34	143849	1	PC	GF245 double nipple reduction 3/4"-1/2"	
35	181383	1	PC	Hose D15/19 L=2.18 1/2"AG-Cone 3/4"	
36	180785	1	PC	Hose D15/19 L=2.5 1/2" AG-Cone 3/4"	
37	316649	1	PC	Hose D15/19 L=5.0 1/2"AG-Cone 3/4"	
40	312736	1	PC	Carrying strap	

8.18 Converto System dry, single parts DN60

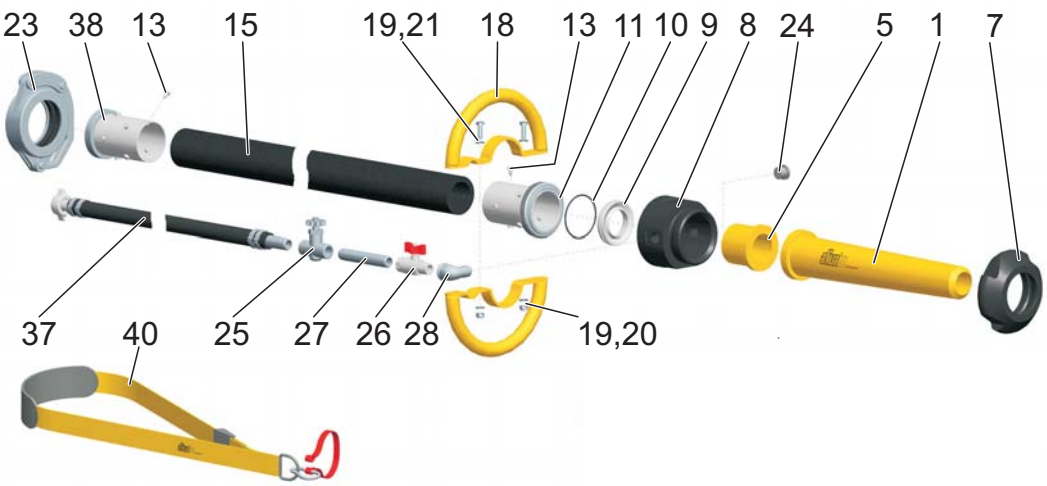

8.19 Converto System BackInlet, single parts DN60

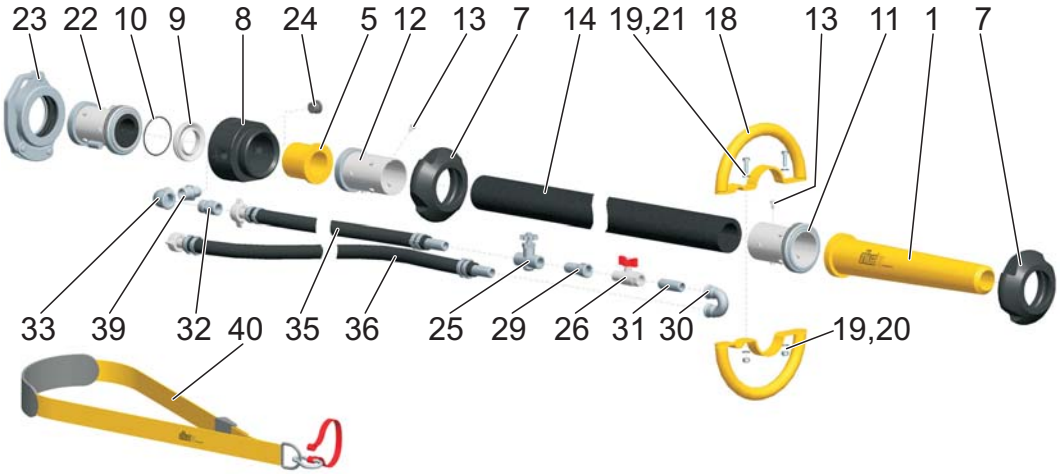

8.20 Converto System wet, single parts DN60

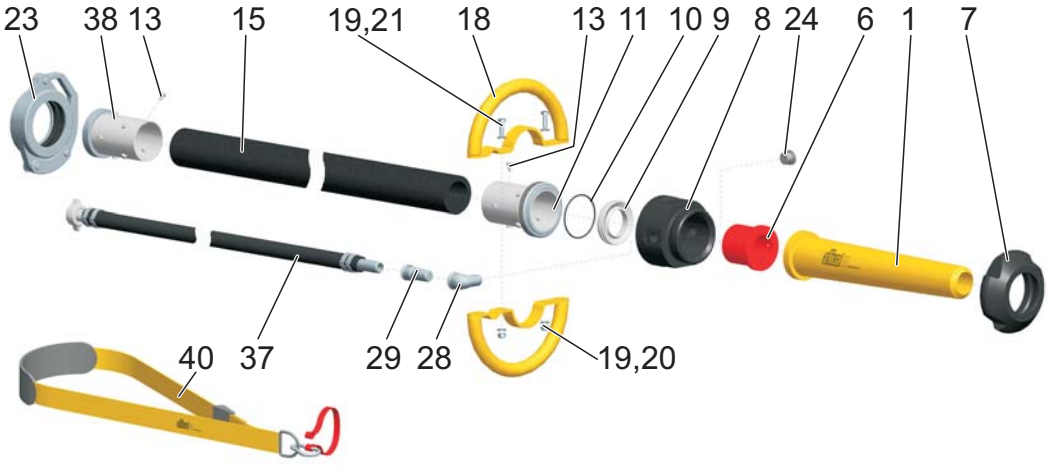

Converto System dry / BackInlet / wet, single parts DN60

Item	Part No.	Qty.	Unit	Decription
1	312535	1	PC	Spray nozzle DN60/65/4"
5	315160	1	PC	Water ring yellow/dry DN60/65
6	315162	1	PC	Water ring red/wet DN60/65
7	179895	2	PC	Swivel nut DN60/65/Rd120
8	179897	1	PC	Inlet housing DN60/65/D90
9	316342	1	PC	Wearring DN60/65
10	144256	1	PC	O-ring 82.00x4.00mm NBR 70
11	312534	1	PC	Hose casing threaded DN60/Rd120
12	312533	1	PC	Hose casing DN60/4"
13	66569	16	PC	Sheet-metal screw hex D6.3x16 zincked
14	312676	1	PC	Conveying hose DN60 L2.5m
15	312531	1	PC	Conveying hose DN60 L5.0m
18	180002	2	PC	Handhold spray device DN60/65
19	145970	4	PC	Disc M8/16x1,5 zincked BN715
20	146133	2	PC	Counter-nut M8 cl. 8 zinck. BN161
21	145631	2	PC	Hexagonal screw M8×25 8.8 BN56
22	312582	1	PC	Coupling hose DN60 Rd120/3"
23	66927	1	PC	Coupling cpl. 3" (GF30G+GU)
24	167261	1	PC	EO-screw connexion VSTI R 3/4"-ED CF
25	66867	1	PC	Needle valve 1/2" metallic handwheel
26	180786	1	PC	Ball cock 1/2" AG/IG MS/PTFE
27	301579	1	PC	GF530 pipe nipple 1/2"-120 zincked
28	143704	1	PC	GF 92 angle Red. 1/2"IG-3/4"AG zincked
29	301457	1	PC	GF526 extension 1/2"-60 zincked
30	182713	1	PC	GF60 double bend 1/2" zincked
31	143961	1	PC	GF530 pipe nipple 1/2"-60 zincked
32	116235	1	PC	Double nipple KK3/4" - KK3/4" zincked
33	116237	1	PC	GF90 angle 3/4"zincked
35	181383	1	PC	Hose D15/19 L=2.18 1/2"AG-Cone 3/4"
36	180785	1	PC	Hose D15/19 L=2.5 1/2" AG-Cone 3/4"
37	316649	1	PC	Hose D15/19 L=5.0 1/2"AG-Cone 3/4"
38	312538	1	PC	Hose casing DN60/3"
39	143983	1	PC	GF530 pipe nipple 3/4"-60 zincked
40	312736	1	PC	Carrying strap

8.21 Converto System dry, single parts DN65

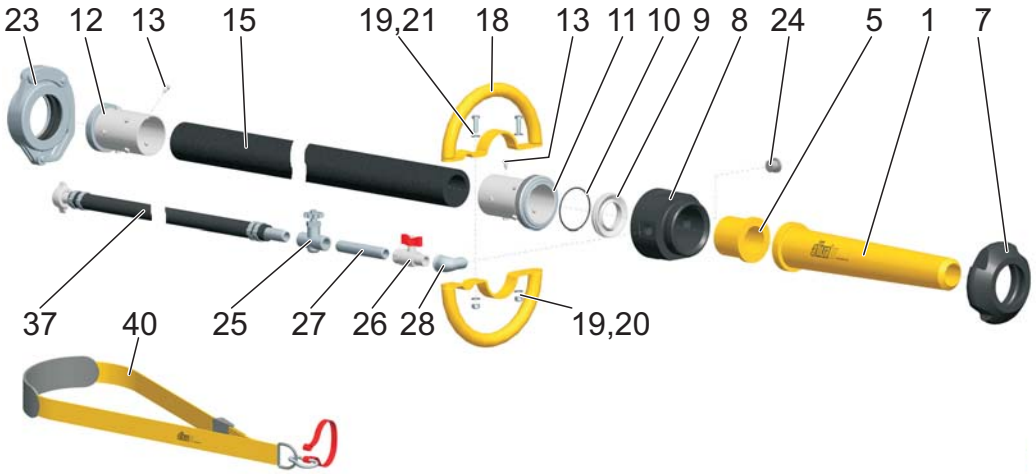

8.22 Converto System BackInlet, single parts DN65

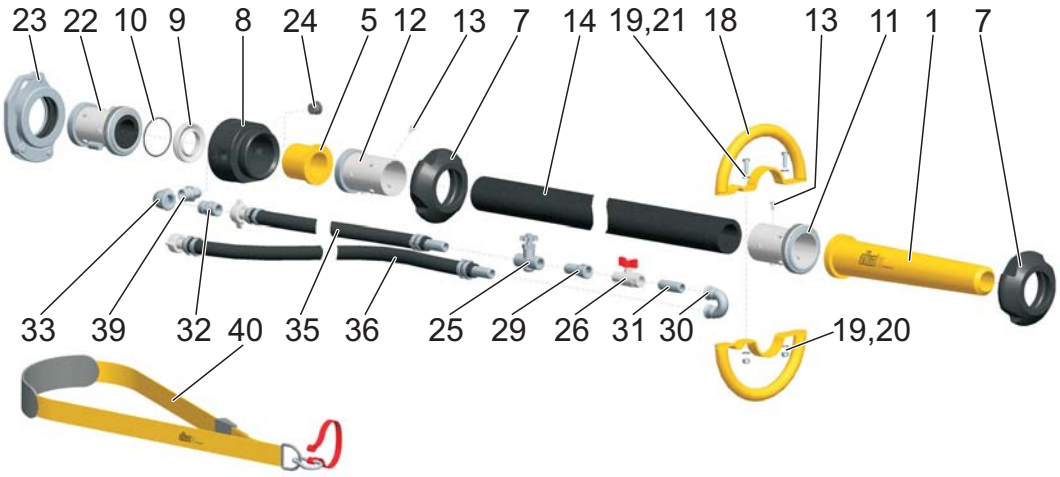

8.23 Converto System wet, single parts DN65

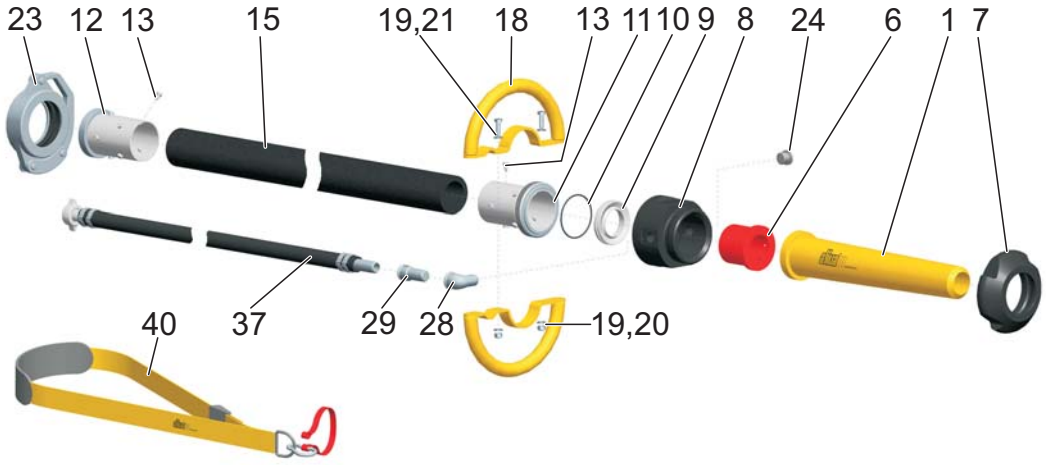

BUILDING TRUST

Converto System dry / BackInlet / wet, single parts DN65

Item	Part No.	Qty.	Unit	Decription	
1	312535	1	PC	Spray nozzle	DN60/65/4"
5	315160	1	PC	Water ring yellow/dry	DN60/65
6	315162	1	PC	Water ring red/wet	DN60/65
7	179895	2	PC	Swivel nut	DN60/65/Rd120
8	179897	1	PC	Inlet housing	DN60/65/D90
9	316342	1	PC	Wearring	DN60/65
10	144256	1	PC	O-ring 82.00x4.00mm NBR 70	
11	312426	1	PC	Hose casing threaded	DN65/Rd120
12	312500	1	PC	Hose casing	DN65/4"
13	146159	16	PC	Sheet metal screw hex D6.3x13 zincked	
14	312677	1	PC	Conveying hose DN65 L2.5m	
15	312422	1	PC	Conveying hose DN65 L5.0m	
18	180002	2	PC	Handhold spray device	DN60/65
19	145970	4	PC	Disc M8/16x1,5 zincked BN715	
20	146133	2	PC	Counter-nut M8 cl. 8 zinck. BN161	
21	145631	2	PC	Hexagonal screw M8x25 8.8 BN56	
22	312583	1	PC	Coupling hose DN65	Rd120/4"
23	66893	1	PC	Coupling cpl. 4"	(GF40M+GU)
24	167261	1	PC	EO-screw connexion VSTI R 3/4"-ED CF	
25	66867	1	PC	Needle valve 1/2" metallic handwheel	
26	180786	1	PC	Ball cock 1/2" AG/IG MS/PTFE	
27	301579	1	PC	GF530 pipe nipple 1/2"-120 zincked	
28	143704	1	PC	GF 92 angle Red. 1/2"IG-3/4"AG zincked	
29	301457	1	PC	GF526 extension 1/2"-60 zincked	
30	182713	1	PC	GF60 double bend 1/2" zincked	
31	143961	1	PC	GF530 pipe nipple 1/2"-60 zincked	
32	116235	1	PC	Double nipple KK3/4" - KK3/4" zincked	
33	116237	1	PC	GF90 angle 3/4" zincked	
35	181383	1	PC	Hose D15/19 L=2.18 1/2"AG-Cone 3/4"	
36	180785	1	PC	Hose D15/19 L=2.5 1/2" AG-Cone 3/4"	
37	316649	1	PC	Hose D15/19 L=5.0 1/2"AG-Cone 3/4"	
39	143983	1	PC	GF530 pipe nipple 3/4"-60 zincked	
40	312736	1	PC	Carrying strap	

9 Converto System RoboSpray - Thin stream

9.1 Converto System RoboSpray

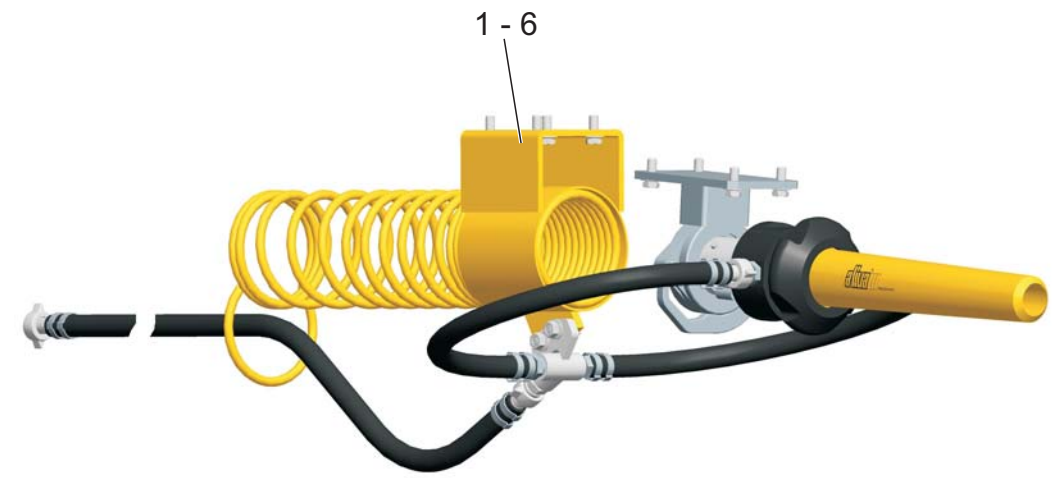

9.2 Converto System RoboSpray BackInlet

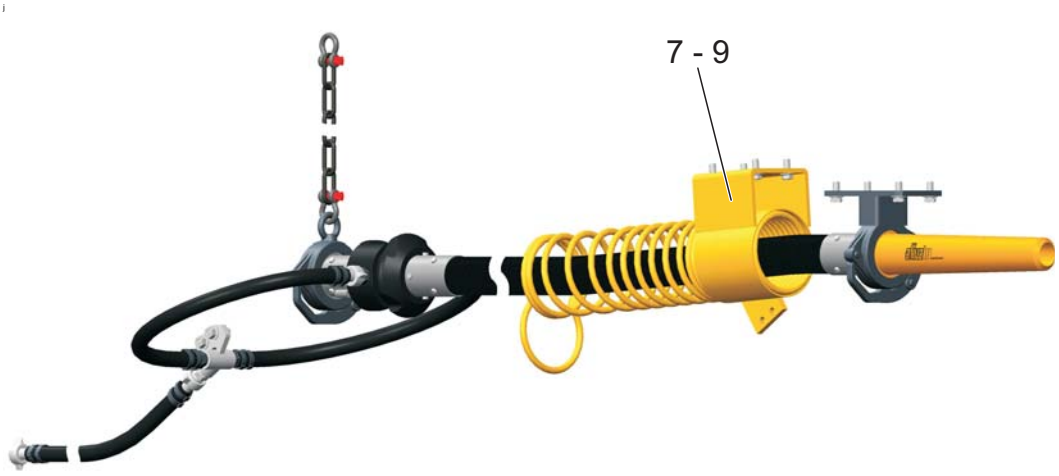

Converto System RoboSpray

Item	Part No.	Qty.	Unit	Description
1	312929	1	PC	Converto System RoboSpray dry DN50
2	312930	1	PC	Converto System RoboSpray dry DN60
3	312931	1	PC	Converto System RoboSpray dry DN65
4	312978	1	PC	Converto System RoboSpray wet DN50
5	312979	1	PC	Converto System RoboSpray wet DN60
6	312980	1	PC	Converto System RoboSpray wet DN65
7	317026	1	PC	Converto System RoboSpray BackInlet DN50
8	317028	1	PC	Converto System RoboSpray BackInlet DN60
9	317040	1	PC	Converto System RoboSpray BackInlet DN65

9.3 Converto System RoboSpray, single parts

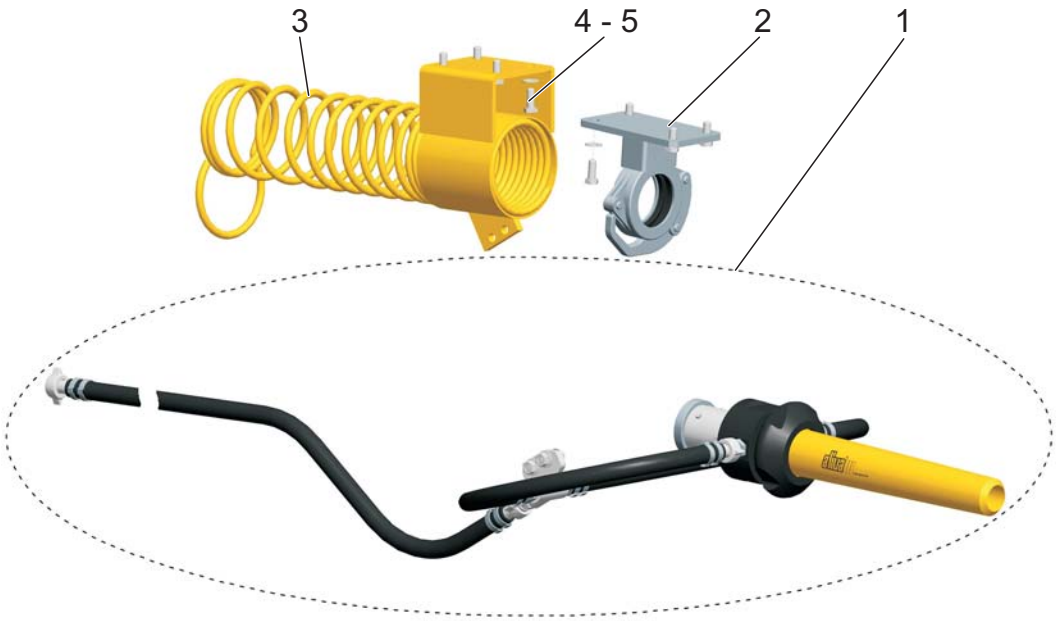

9.4 Converto System RoboSpray BackInlet, single parts

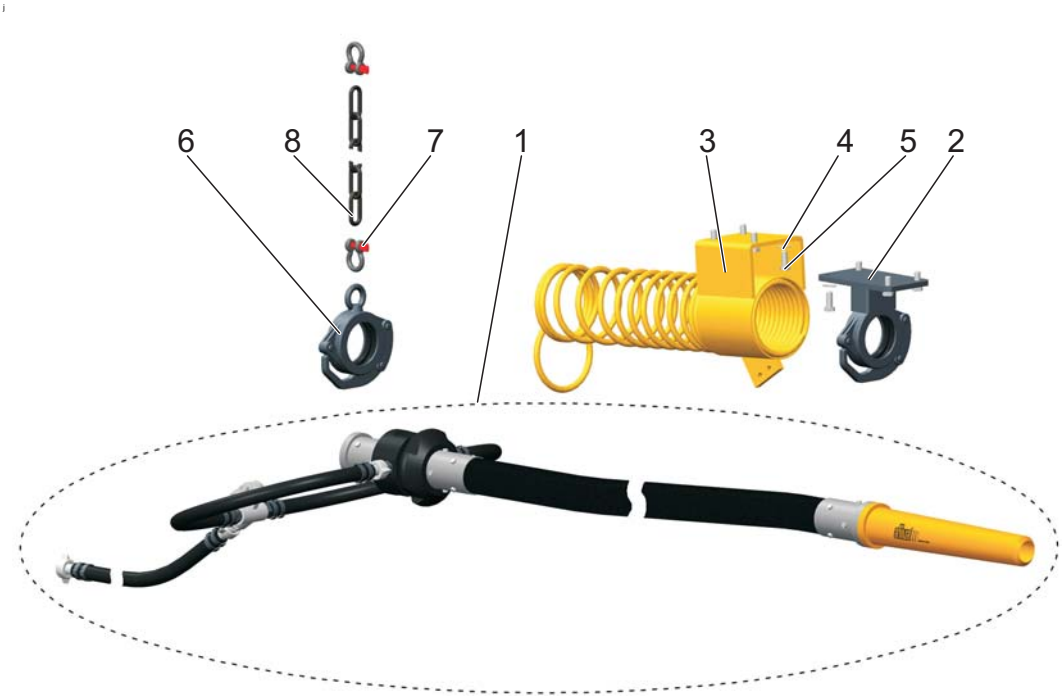

Converto System RoboSpray, single parts

Item	Part No.	Qty.	Unit	Description	øA2 (P.17)
1	312735	1	PC	Converto RoboSpray dry DN50	50
1	312737	1	PC	Converto RoboSpray dry DN60	60
1	312712	1	PC	Converto RoboSpray dry DN65	65
1	312981	1	PC	Converto RoboSpray wet DN50	50
1	312982	1	PC	Converto RoboSpray wet DN60	60
1	312983	1	PC	Converto RoboSpray wet DN65	65
2	66466	1	PC	Nozzle holder 3"	50,60
2	66458	1	PC	Nozzle holder 4"	65
3	139812	1	PC	Anti-kink device D125 spring	-
4	66662	8	PC	Locking washer rip-lock M12 BN13292	-
5	66658	8	PC	Hexagonal screw M12x 30 8.8 zn.bl.	-

Converto System RoboSpray BackInlet, single parts

Item	Part No.	Qty.	Unit	Description	øA2 (P.17)
1	317027	1	PC	Converto RoboSpray BackInlet DN50	50
1	317029	1	PC	Converto RoboSpray BackInlet DN60	60
1	317041	1	PC	Converto RoboSpray BackInlet DN65	65
2	66466	1	PC	Nozzle holder 3"	50
2	66458	1	PC	Nozzle holder 4"	60,65
3	139812	1	PC	Anti-kink device D125 spring	-
4	66662	8	PC	Locking washer rip-lock M12 BN13292	-
5	66658	8	PC	Hexagonal screw M12x 30 8.8 zn.bl.	-
6	138460	1	PC	Coupling with eye cpl. 3" (GF30G+GU)	50,60
6	138461	1	PC	Coupling with eye cpl. 4" (GF40G+GU)	65
7	142732	2	PC	Shakle 3/8" 9S K010	-
8	142730	2	M	Chain d 8mm, C-elements, hot-dipped	-

9.5 Converto RoboSpray, single parts

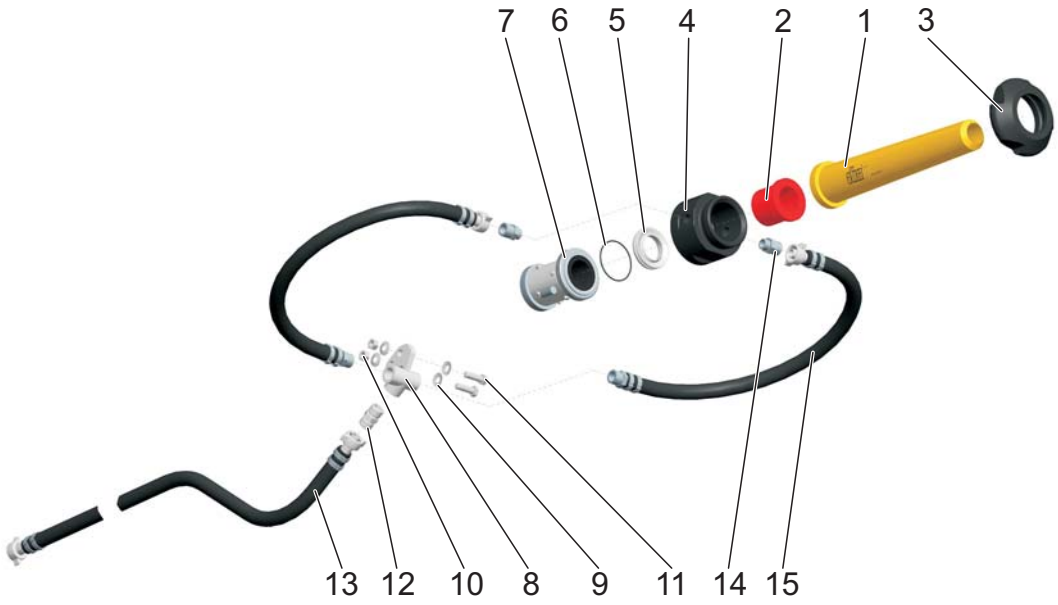

9.6 Converto RoboSpray BackInlet, single parts

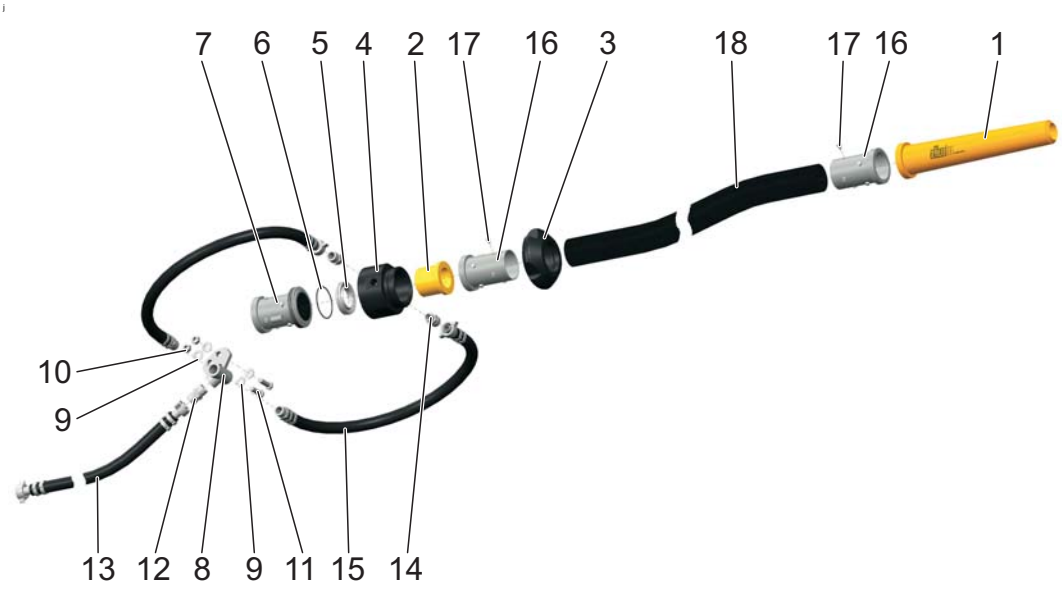

Converto RoboSpray, single parts

Item	Part No.	Qty.	Unit	Description		øA2 (P.17)
1	179896	1	PC	Spray nozzle	DN50/3"	50
1	312535	1	PC	Spray nozzle	DN60/65/4"	60,65
2	315152	1	PC	Water ring yellow/dry	DN50	50
2	315160	1	PC	Water ring yellow/dry	DN60/65	60,65
2	313033	1	PC	Water ring red/wet	DN50	50
2	315162	1	PC	Water ring red/wet	DN60/65	60,65
3	312421	1	PC	Swivel nut	DN50/Rd100	50
3	179895	1	PC	Swivel nut	DN60/65/Rd120	60,65
4	312423	1	PC	Inlet housing	DN50/D77	50
4	179897	1	PC	Inlet housing	DN60/65/D90	60,65
5	316277	1	PC	Wearring	DN50	50
5	316342	1	PC	Wearring	DN60/65	60,65
6	144255	1	PC	O-Ring 73.00x3.00mm NBR 70		50
6	144256	1	PC	O-Ring 82.00x4.00mm NBR 70		60,65
7	312544	1	PC	Coupling hose DN50	Rd100/3"	50
7	312582	1	PC	Coupling hose DN60	Rd120/3"	60
7	312583	1	PC	Coupling hose DN65	Rd120/4"	65
8	312729	1	PC	Distributor triple	welded	-
9	66662	4	PC	Locking washer rip-lock M12 BN13292		-
10	145936	2	PC	Hexagonal nut M12 Kl.8 zincked BN117		-
11	145685	2	PC	Hexagonal oS screw M12x40 8.8 zn.bl.		-
12	138451	1	PC	Double nipple KK3/4" - KK3/4" Inox		-
13	312709	1	PC	Hose D19/29 L2.5m KK 3/4" IG/IG		-
14	66556	2	PC	Connecting nipple R1/2" x R3/4"		50
14	116235	2	PC	Double nipple KK3/4" - KK3/4" zincked		60,65
15	312730	2	PC	Hose D19/29 L0.9m 3/4"AG 3/4"IG-KON		-
16	179975	2	PC	Hose casing	DN50/3"	50
16	312533	2	PC	Hose casing	DN60/4"	60
16	312500	2	PC	Hose casing	DN65/4"	65
17	146159	16	PC	Sheet metal screw hex D6.3x13 zincked		50,65
17	66569	16	PC	Sheet-metal screw hex D6.3x16 zincked		60
18	181541	1	PC	Conveying hose DN50 L2.5m		50
18	312676	1	PC	Conveying hose DN60 L2.5m		60
18	312677	1	PC	Conveying hose DN65 L2.5m		65

10 Converto System refractory - Thin stream

10.1 Converto System refractory

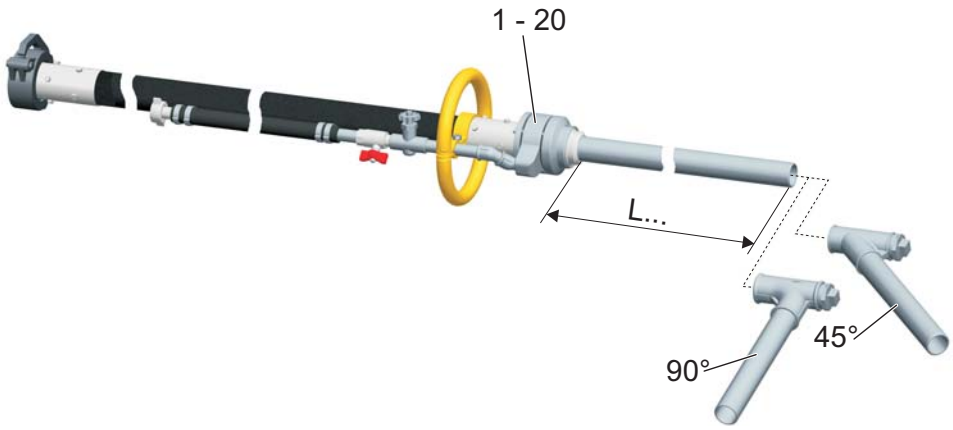

10.2 Converto System refractory without nozzle

10.3 Converto refractory

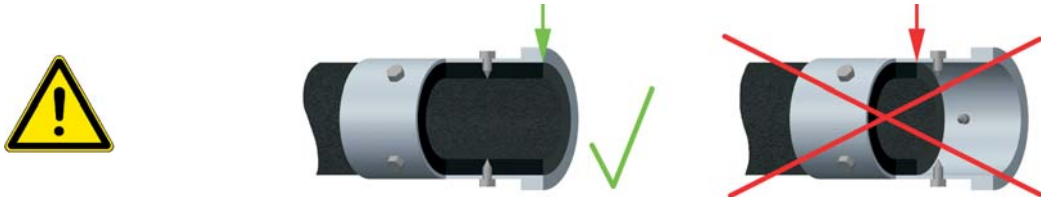

NOTE

If there is space between the **conveying hose** and the **hose casing** it is to com-pensate with tape, **see page 24.**

Converto System refractory

Item	Part No.	Qty.	Unit	Description	øA2 (P.17)
1	315527	1	PC	Converto System Refractory DN32 L1m	32
2	315519	1	PC	Converto System Refractory DN32 L1m 45°	32
3	315526	1	PC	Converto System Refractory DN32 L1m 90°	32
4	315528	1	PC	Converto System Refractory DN32 L3m	32
5	315529	1	PC	Converto System Refractory DN32 L3m 45°	32
6	315530	1	PC	Converto System Refractory DN32 L3m 90°	32
7	315531	1	PC	Converto System Refractory DN32 L6m	32
8	315532	1	PC	Converto System Refractory DN32 L6m 45°	32
9	315533	1	PC	Converto System Refractory DN32 L6m 90°	32
10	315534	1	PC	Converto System Refractory DN38 L1m	38
11	315497	1	PC	Converto System Refractory DN38 L1m 45°	38
12	315535	1	PC	Converto System Refractory DN38 L1m 90°	38
13	315536	1	PC	Converto System Refractory DN38 L3m	38
14	315537	1	PC	Converto System Refractory DN38 L3m 45°	38
15	315538	1	PC	Converto System Refractory DN38 L3m 90°	38
16	315539	1	PC	Converto System Refractory DN38 L6m	38
17	315540	1	PC	Converto System Refractory DN38 L6m 45°	38
18	315541	1	PC	Converto System Refractory DN38 L6m 90°	38
19	315500	1	PC	Converto System Refractory DN50 L7.5m 45°	50
20	315542	1	PC	Converto System Refractory DN50 L6m 45°	50

Converto System refractory without nozzle

Item	Part No.	Qty.	Unit	Description	øA2 (P.17)
30	316657	1	PC	Converto System RefractoryDN32	32
31	316658	1	PC	Converto System Refractory DN38	38
32	316656	1	PC	Converto System Refractory DN50	50

Converto refractory

Item	Part No.	Qty.	Unit	Description	øA2 (P.17)
50	316660	1	PC	Converto Refactory DN32	32
51	316661	1	PC	Converto Refactory DN38	38
52	316659	1	PC	Converto Refactory DN50	50

10.4 Converto System refractory, single parts DN 32 / 38

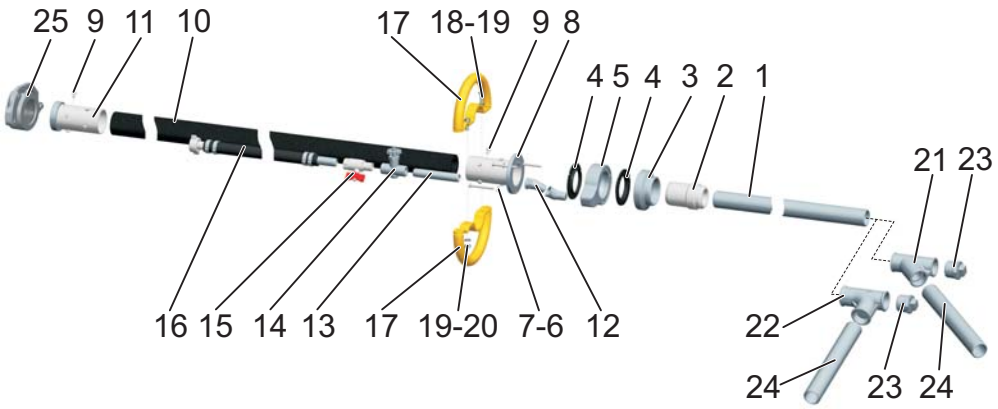

Converto System refractory, single parts DN32 / 38

Item	Part No.	Qty.	Unit	Description	øA2 (P.17)
1	315493	1	PC	StPipe DN32 zinck. L1m - 1 1/4"AG	32,38
1	315521	1	PC	StPipe DN32 zinck. L3m - 1 1/4"AG	32,38
1	315522	1	PC	StPipe DN32 zinck. L6m - 1 1/4"AG	32,38
2	315492	1	PC	Refractory water ring DN32/38	32,38
3	315491	1	PC	Refractory casing 3xM6 - Rd65	32,38
4	138500	2	PC	Refractory sleeve DN32/38	32,38
5	138504	1	PC	Refractory inlet piece DN32/38	32,38
6	145979	3	PC	Locking washer rip-lock M6 BN13292	-
7	145618	3	PC	Hexagonal screw M6x60 cl.8.8 zinck blue	-
8	315518	1	PC	Refractory hose casing DN32	32
8	138499	1	PC	Refractory hose casing DN38	38
9	66569	16	PC	Sheet-metal screw hex D6.3x16 zincked	32
9	146159	16	PC	Sheet metal screw hex D6.3x13 zincked	38
10	145444	20	M	Conveying hose Ø32/52	32
10	145445	20	M	Conveying hose Ø38/58	38
11	182590	1	PC	Hose casing DN32/2 1/2"	32
11	312525	1	PC	Hose casing DN38/2 1/2"	38
12	143716	2	PC	GF121 angle 45° 1/2" zincked	-
13	301579	1	PC	GF530 pipe nipple 1/2"-120 zinckend	-
14	66867	1	PC	Needle valve 1/2" metal. Handwheel	-
15	180786	1	PC	Ball cock 1/2" AG/IG MS/PTFE	-
16	180785	1	PC	Hose D15/19 L=2.5 1/2" AG-Cone 3/4"	-
17	182712	2	PC	Handhold spray device DN32/38	32,38
18	145631	2	PC	Hexagonal screw M8x25 8.8 BN56	-
19	145970	4	PC	Disc M8/16x1,5 zincked BN715	-
20	146133	2	PC	Counter-nut M8 cl. 8 zinck. BN161	-
21	143804	1	PC	GF165 T-piece 45° 1 1/4" zincked	32,38
22	143739	1	PC	GF131 Elbow-T 1 1/4" zincked	32,38
23	143898	1	PC	GF290 Plug 1 1/4" zincked	32,38
24	144037	1	PC	GF530 Pipe nipple 1 1/4"-300 zincked	32,38
25	66908	1	PC	Coupling cpl. 2 1/2"C(GF25G+GU)	32,38

10.5 Converto System refractory, single parts DN50

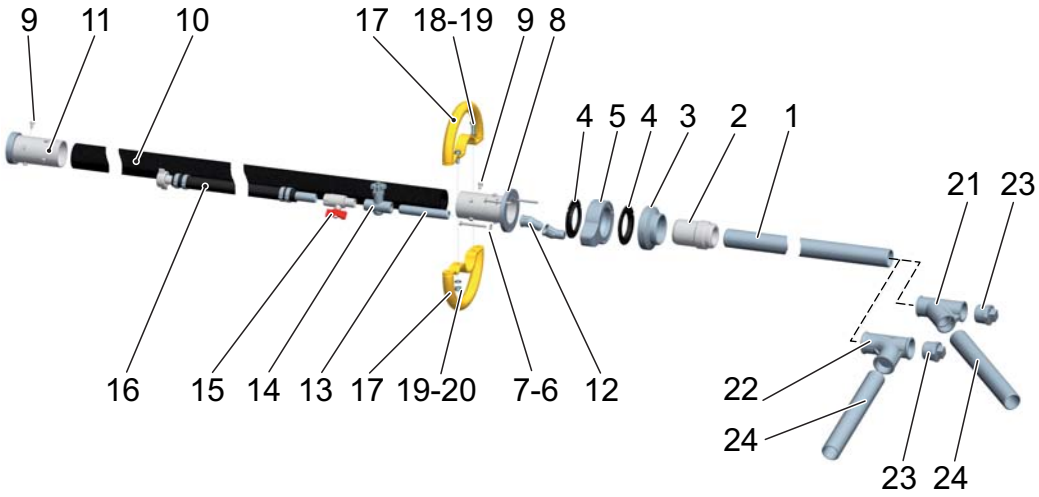

Converto System refractory, single parts DN50

Item	Part No.	Qty.	Unit	Description
1	315405	1	PC	StPipe DN50 zinck. L3m - 2"AG - 2"AG
1	319083	1	PC	StPipe DN50 zinck. L4.5m-2"AG-2"AG
1	315525	1	PC	StPipe DN50 zinck. L6m - 2"AG
1	140456	1	PC	StPipe DN50 zinck. L7.5m-2"AG
2	315504	1	PC	Refractory water ring DN50
3	315505	1	PC	Refractory casing 3xM6 - Rd78
4	138511	2	PC	Refractory sleeve DN50
5	138517	1	PC	Refractory inlet piece DN50
6	145979	3	PC	Locking washer rip-lock M6 BN13292
7	145618	3	PC	Hexagonal screw M6x60 cl.8.8 zinck blue
8	138510	1	PC	Refractory hose casing DN50
9	146159	16	PC	Sheet metal screw hex D6.3x13 zincked
10	145447	20	M	Conveying hose Ø50/70
11	179975	1	PC	Hose casing DN50/3"
12	143716	2	PC	GF121 angle 45° 1/2" zincked
13	301579	1	PC	GF530 pipe nipple 1/2"-120 zinckend
14	66867	1	PC	Needle valve 1/2" metal. Handwheel
15	180786	1	PC	Ball cock 1/2" AG/IG MS/PTFE
16	180785	1	PC	Hose D15/19 L=2.5 1/2" AG-Cone 3/4"
17	179995	2	PC	Handhold spray device DN50
18	145631	2	PC	Hexagonal screw M8x25 8.8 BN56
19	145970	4	PC	Disc M8/16x1,5 zincked BN715
20	146133	2	PC	Counter-nut M8 cl. 8 zinck. BN161
21	315524	1	PC	GF165 T-piece 45° 2" zincked
23	143900	1	PC	GF290 Plug 2" zincked
24	144048	1	PC	GF530 Pipe nipple 2"-300 zincked
25	66927	1	PC	Coupling cpl. 3" (GF30G+GU)

11 Back-fill lance

11.1 Back-fill lance, compl.

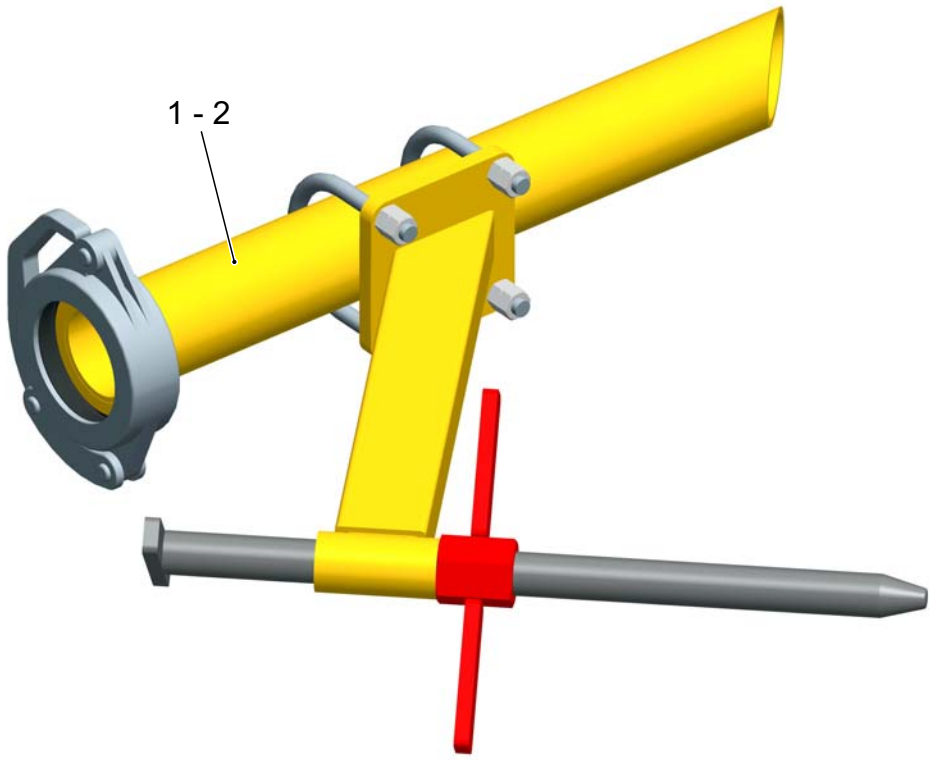

11.2 Back-fill lance, single parts

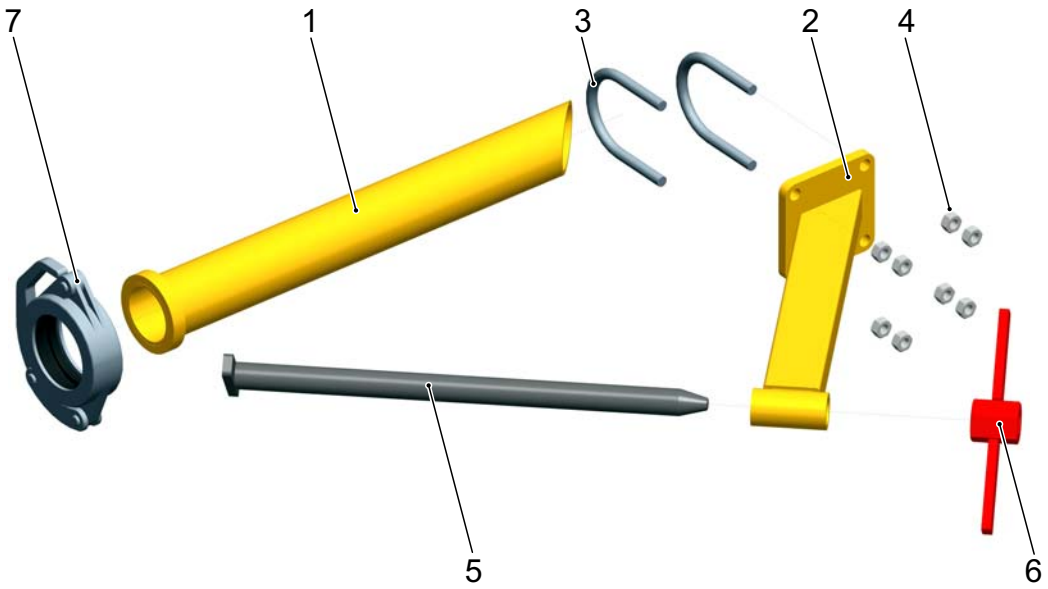

Back-fill lance, compl.

Item	Part No.	Qty.	Unit	Description	øA2 (P.17)
1	303769	1	PC	Back-fill lance 3" D70	50,60
2	138526	1	PC	Back-fill lance 4" D80	65

Back-fill lance, single parts

Item	Part No.	Qty.	Unit	Description	øA2 (P.17)
1	303771	1	PC	Lance 3" D70 Back-fill lance	50,60
1	138527	1	PC	Lance 4" D80 Back-fill lance	65
2	138523	1	PC	Arm Back-fill lance SBG	-
3	142891	2	PC	Stirrup bolt 2 1/2" M12	-
4	145936	8	PC	Hexagonal nut M12 Kl.8 zincked BN117	-
5	138524	1	PC	Spindle SBG Back-fill lance	-
6	138525	1	PC	Clamping Back-fill lance	-
7	66927	1	PC	Coupling cpl. 3"C (GF30G+GU)	50,60
7	66893	1	PC	Coupling cpl. 4"C (GF40M+GU)	65

12 Compressor air hose

12.1 Compressor air hose, 10 or 20 metres, compl.

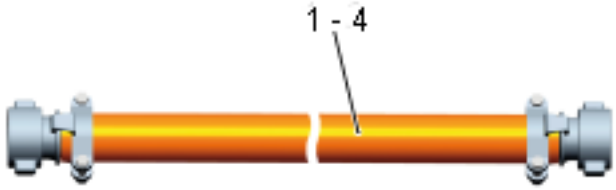

12.2 Compressor air hose, 10 or 20 metres, single parts

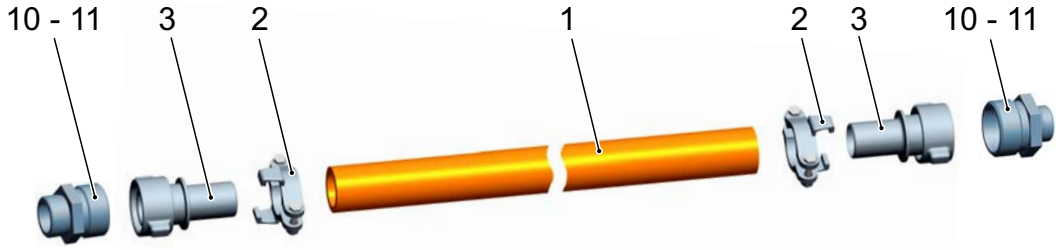

12.3 Air supply accessories compressor / rotor machine

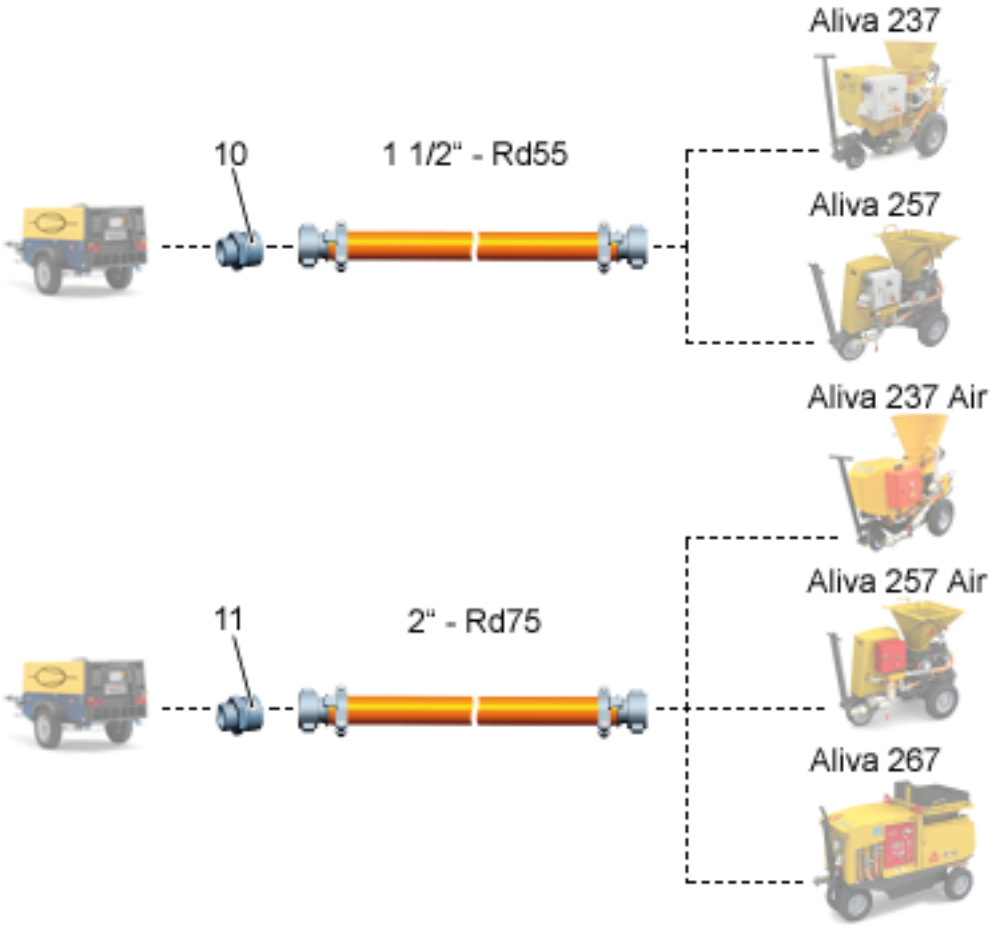

Compressor air hose, 10 or 20 metres, compl.

Item	Part No.	Qty.	Unit	Description
1	317251	1	PC	Air hose D38/56 L10m KKRd55-KKRd55 1 1/2"
2	317250	1	PC	Air hose D38/56 L20m KKRd55-KKRd55 1 1/2"
3	139184	1	PC	Air hose D51/71 L10m KKRd75-KKRd75 2"
4	315393	1	PC	Air hose D51/71 L20m KKRd75-KKRd75 2"

Compressor air hose, 10 or 20 metres, single parts 1 1/2“

Item	Part No.	Qty.	Unit	Description
1	145446	-	M	Air hose D38/56 16bar Rmin320 1 1/2" (Standard delivery 10 m or 20 m)
2	142900	2	PC	Hose clamp with catch D45-53
3	67163	2	PC	Cone coupling RD55x1/6"IG D1 1/2"

Compressor air hose, 10 or 20 metres, single parts 2“

Item	Part No.	Qty.	Unit	Description
1	145449	-	M	Connecting nipple D51/71 16bar Rmin450 2" (Standard delivery 10 m or 20 m)
2	142919	2	PC	Hose clamp with claw D60-73
3	67113	2	PC	Cone coupling RD75x1/6" IG - D2"

Air supply accessoires compressor / rotor machine

Item	Part No.	Qty.	Unit	Description
10	67406	1	PC	Connecting nipple G 1 1/2" - Rd55x1/6"
11	144098	1	PC	Connecting nipple G 2" - Rd75x1/6"

13 Air hose, rotor machine - dispensing unit

13.1 Air hose, compl.

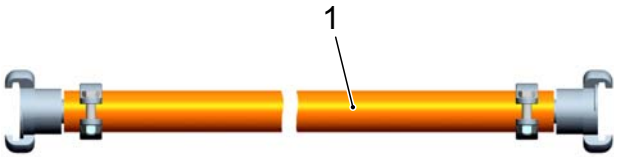

13.2 Air hose, single parts

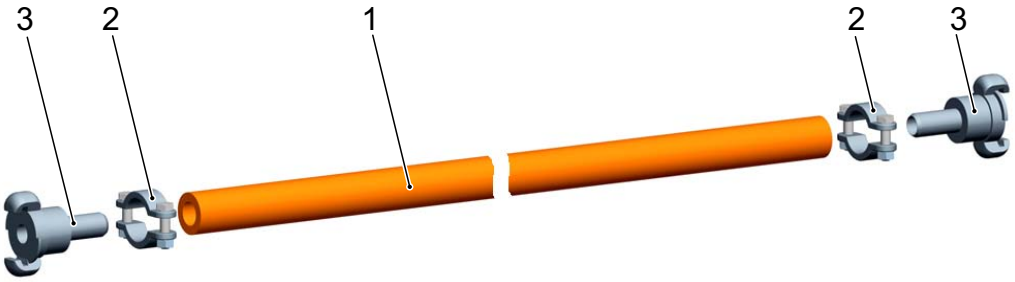

13.3 Connectors / air supply accessories - dispensing unit

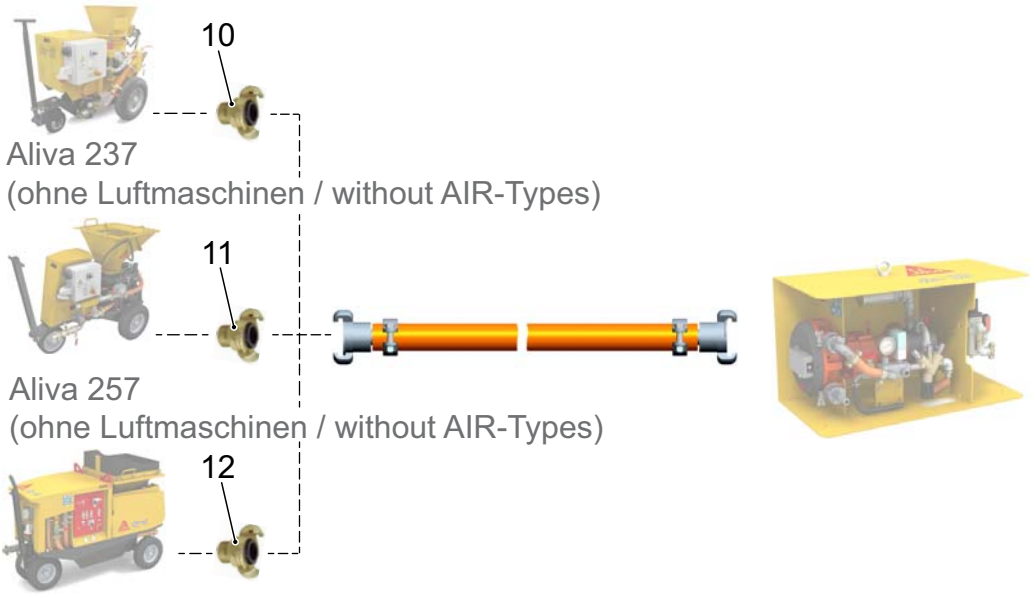

Air hose, compl.

Item	Part No.	Qty.	Unit	Description
1	315395	1	PC	Air hose D19/33 L10 m MK - MK

Air hose, single parts

Item	Part No.	Qty.	Unit	Description
1	67221	10	M	Air hose D19/33 25 bar Rmin 160
2	142905	2	PC	Hose clamp 28-34
3	144119	2	PC	Moment coupling spout D19

Connectors / air supply accessories - dispensing unit

Item	Part No.	Qty.	Unit	Description
10	144064	1	PC	Moment coupling 1" AG steel zincked
11	315396	1	PC	Moment coupling 1 1/4" IG steel zincked
12	144118	1	PC	Moment coupling 3/4" AG steel zincked

14 Water hose - dispensing unit

14.1 Water hose, 10 or 20 metres, compl.

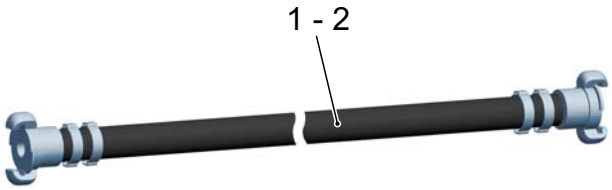

14.2 Water hose, 10 or 20 metres, single parts

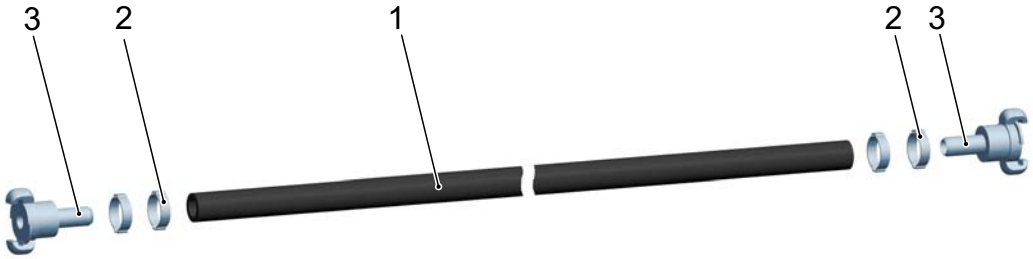

Water hose, 10 or 20 metres, compl.

Item	Part No.	Qty.	Unit	Description
1	315398	1	PC	Water hose D19/29 L10 m MK - MK
2	315399	1	PC	Water hose D19/29 L20 m MK - MK

Water hose, 10 or 20 metres, single parts

Item	Part No.	Qty.	Unit	Description
1	145460	-	M	Hose D19/30 (Standard delivery 10m or 20m)
2	142893	4	PC	Hose clamp 27-31 Ötiker
3	144119	2	PC	Moment coupling spout D19

15 Water hose, direct

15.1 Water hose, compl.

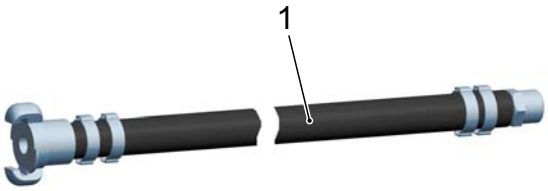

15.2 Water hose, single parts

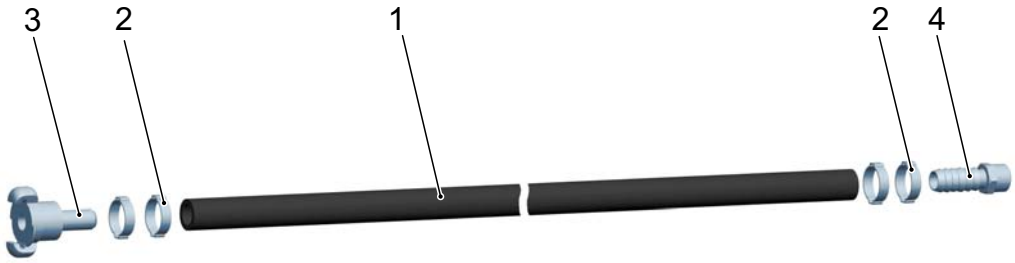

Water hose, compl.

Item	Part No.	Qty.	Unit	Description
1	315401	1	PC	Water hose cpl D19/29 L 10 m MK-KK 3/4"AG

Water hose, single parts

Item	Part No.	Qty.	Unit	Description
1	145460	10	M	Hose D19/29
2	142893	4	PC	Hose clamp 27-31 Ötiker
3	144119	1	PC	Moment coupling spout D19
4	138536	1	PC	External thread spout D19 - KK 3/4" AG

16 Additive / water hose

16.1 Additive / water hose, 10 or 20 metres, compl.

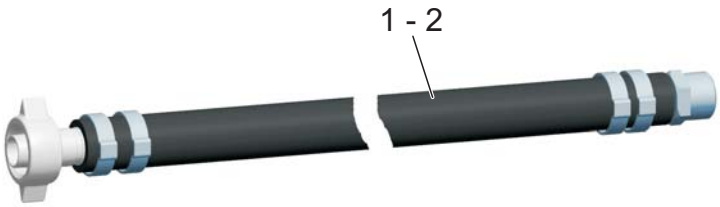

16.2 Additive / water hose, 10 or 20 metres, single parts

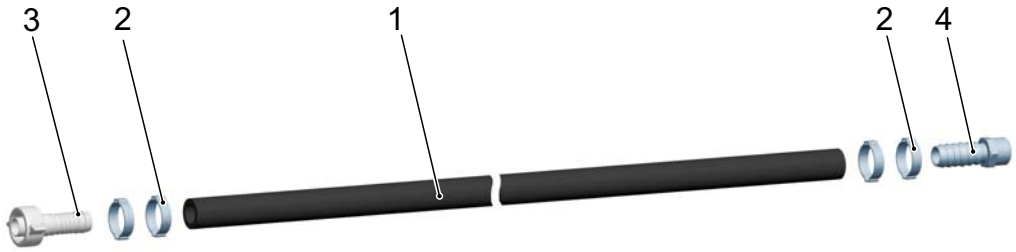

Additive / water hose, 10 or 20 metres, compl.

Item	Part No.	Qty.	Unit	Description
1	315400	1	PC	Hose D19/29 L 10 m KK 3/4" IG/AG
2	66255	1	PC	Hose D19/29 L 20 m KK 3/4" IG/AG

Additive / water hose, 10 or 20 metres, single parts

Item	Part No.	Qty.	Unit	Description
1	145460	-	M	Hose D19/29 (Standard delivery 10 m or 20 m)
2	142893	4	PC	Hose clamp 27-31 Ötiker
3	66787	1	PC	Cone coupling D19 - 3/4" IG - DN13
4	138536	1	PC	External thread spout D19 - KK 3/4" AG

17 Pipeline of water / compressed air

17.1 Water / compressed air pipeline, compl. 3 m and 6 m

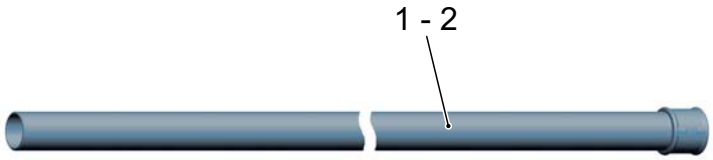

17.2 Compressed air pipeline accessories

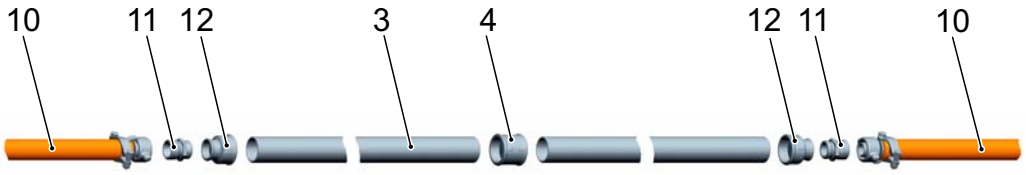

17.3 Water pipeline accessories

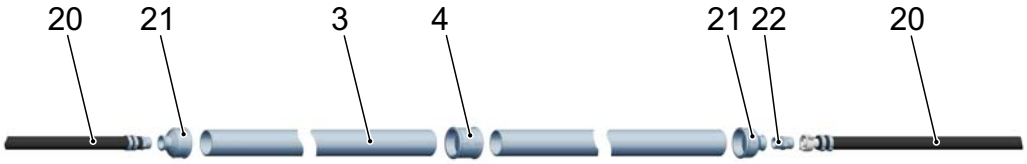

Water / compressed air pipeline, compl. 3 m and 6 m

Item	Part.No.	Qty.	Unit	Description
1	315404	1	PC	StPipe DN50 zinck L 3 m 2"AG-Muffe 2"IG
2	315406	1	PC	StPipe DN50 zinck L 6 m 2"AG-Muffe 2"IG

Pipleine single parts / accessories

Item	Part.No.	Qty.	Unit	Description
3	315405	1	PC	StPipe DN50 zinck L 3 m 2"AG - 2"AG
3	319083	1	PC	StPipe DN50 zinck L4.5m 2"AG - 2"AG
3	315407	1	PC	StPipe DN50 zinck L 6 m 2"AG - 2"AG
4	315415	1	PC	GF270 Sleeve 2" zincked

Compressed air pipeline accessories

Item	Part.No.	Qty.	Unit	Description
10	125637	1	PC	Air hose D32/49 L 10 m KKRd46-KKRd46
11	66759	1	PC	Connecting nipple 1 1/4" - Rd46x1/6"
12	143818	1	PC	GF240 Sleeve red.2" - 1 1/4" zincked

Water pipeline accessories

Item	Part.No.	Qty.	Unit	Description
20	315400	1	PC	Hose D19/29 L10m KK 3/4" IG/AG
21	315408	1	PC	GF240 Sleeve red.2" - 3/4" zincked
22	116235	1	PC	Double nipple KK3/4" - KK3/4" zincked

18 Pipeline for additives

18.1 Inox pipe for additives, compl.

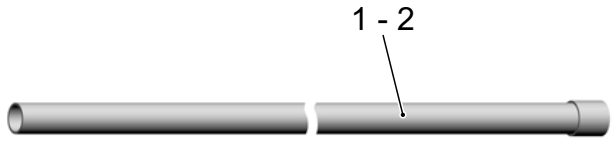

18.2 Inox pipe single parts / accessories

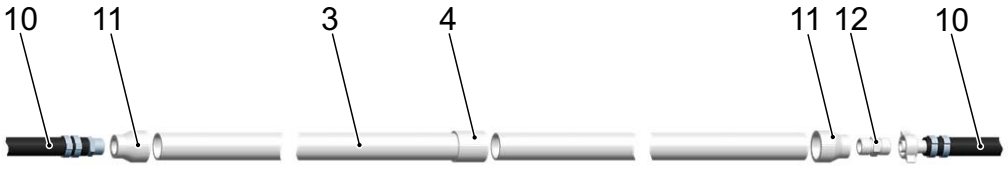

Inox pipe for additives, compl.

Item	Part No.	Qty.	Unit	Description
1	315412	1	PC	Inox pipe DN32 L 3 m 1 1/4" AG-sleeve IG
2	315413	1	PC	Inox pipe DN32 L 6 m 1 1/4" AG-sleeve IG

Inox pipe single parts / accessories

Item	Part No.	Qty.	Unit	Description
3	315410	1	PC	Inox pipe DN32 L 3 m 1 1/4" - 1 1/4"
3	315411	1	PC	Inox pipe DN32 L 6 m 1 1/4" - 1 1/4"
4	144157	1	PC	Sleeve 1 1/4" Inox

Accessories for Inox pipe

Item	Part No.	Qty.	Unit	Description
10	315400	1	PC	Hose D19/29 L10 m KK 3/4" IG/AG BE
11	144170	1	PC	Reducing socket 1 1/4 - 3/4" Inox
12	138451	1	PC	Double nipple KK3/4" - KK3/4" Inox

19 Suction hose for dispensing unit

19.1 Suction hose, compl.

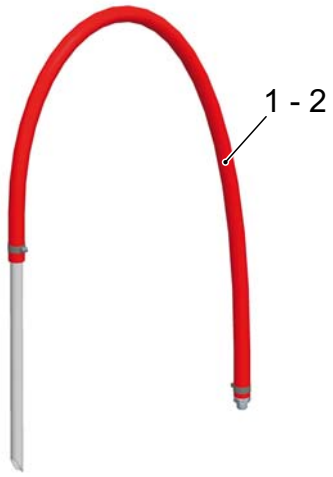

19.2 Suction hose, single parts

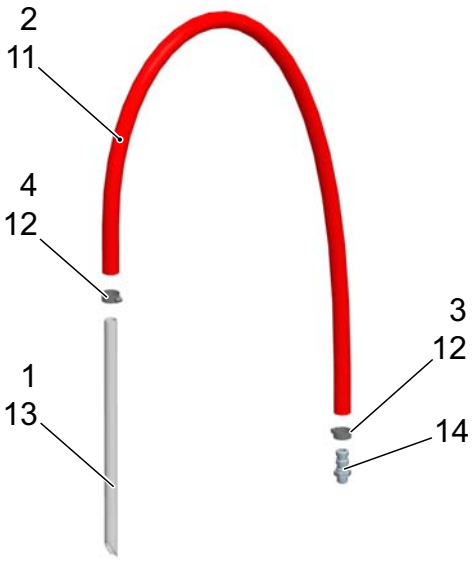

Suction hose D20 compl. (Aliva 403 DL12 dispensing unit)

Item	Part No.	Qty.	Unit	Description
1	139870	1	PC	Suction hose D20 (AL-403 DL12)

Suction hose D25 compl. (Aliva 403 DL10/18 dispensing unit)

Item	Part No.	Qty.	Unit	Description
2	155962	1	PC	Suction hose D25 (AL-403 DL10/18)

Suction hose D20, single parts

Item	Part No.	Qty.	Unit	Description
1	139846	1	PC	Suction pipe D16/20 PVC
2	145479	3	M	Hose D20/27 PVC
3	142971	1	PC	Cable connector 9x180 mm
4	142872	1	PC	Strap hy-gear 13-32 mm

Suction hose D25, single parts

Item	Part No.	Qty.	Unit	Description
11	145531	6	M	Hose D25/33 mm PVC
12	118931	2	PC	Strap hy-gear 19-40 mm
13	118878	1	PC	Suction pipe D25/22
14	121913	1	PC	Hose nipple D25 R1/2

20 Personal protection equipment

20.1 Personal protection equipment, single parts

Personal protection equipment, single parts

Item	Part No.	Qty.	Unit	Description
1	68238	1	PC	Spraying hood Sika fabric
2	77451	1	PC	Wire mesh glasses
3	315647	5	PC	Face mask Moldex 3405/FFP3

21 Aliva Rotor Repro (0.6 liters) and Aliva Converto Repro

Aliva Rotor Repro (0.6 liters) and Aliva Converto Repro

Overwiew Conversion kits Aliva-237 to Rotor Repro

Rotor size	Material-Nr.	Description
from 0.7L rotor	319010	Conversion kit Rotor Repro from 0.7L AL-237 inclusive reduction DN25 2"
from 2.0L rotor	319011	Conversion kit Rotor Repro from 2.0L AL-237 inclusive reduction DN25 2"
from 3.6L rotor	319012	Conversion kit Rotor Repro from 3.6L AL-237 inclusive reduction DN25 2"
from 5.6L rotor	319013	Conversion kit Rotor Repro from 5.6L AL-237 inclusive reduction DN25 2"

Overview of Aliva Converto Repro + Conveying hose

	Material-Nr.	Description
Conveying hose including 1 piece coupling	318386	Conveying hose DN25 10m 2" cpl.
	318477	Conveying hose DN25 20m 2" cpl.
Spraying nozzle	318462	Converto Repro DN25 (without conveying hose)
	318371	Converto Repro DN25 L5m (with 5m conveying hose)
	318901	Converto Repro DN25 L20m (with 20m conveying hose)

Notes

GLOBAL AND LOCAL PARTNERSHIP

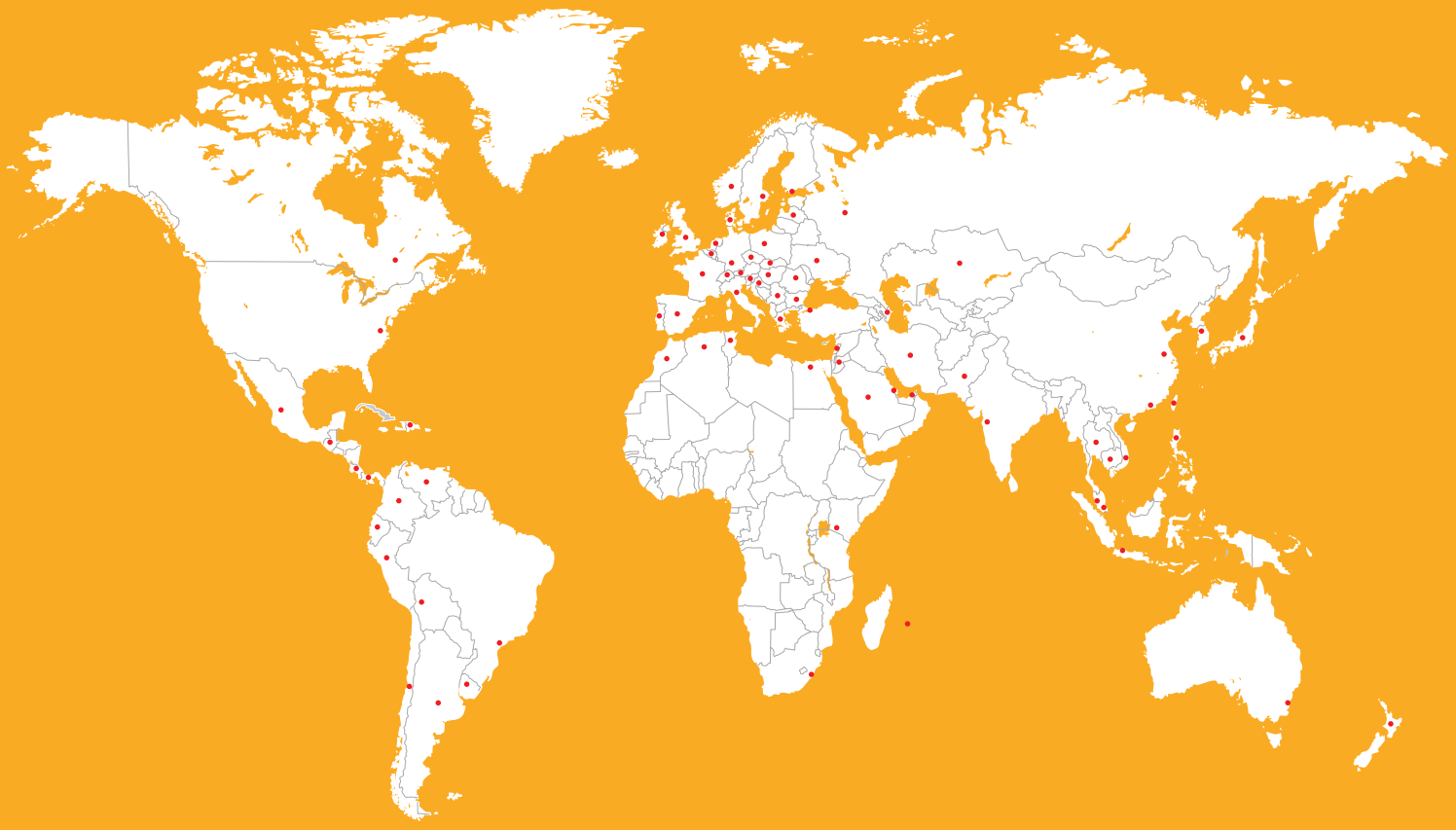

FOR MORE INFORMATION ON ALIVA EQUIPMENT:

ABOUT US

Aliva Equipment is a subsidiary of SIKA, located in Widen, Switzerland. For more than half a century, Aliva Equipment has been active in the field of shotcrete as a specialist for designing and manufacturing rotor machines, concrete and dosing pumps, telescopic spraying arms and special construction systems for tunnel boring machines (TBMs). Aliva Equipment is known for the outstanding quality and function of its concrete spraying machines and systems, which are sold and supported by over 70 representatives throughout the world. Aliva Equipment has also gained a leading position in the steel industry market in the area of refractory systems due to its technical expertise and customer-oriented solutions. Our global network of dealers and efficient order processing department allow us to serve our regional and world-wide customers quickly and reliable.

Prior to use or processing, always consult the current product data sheet of the products used. The current version of our respective General Terms and Conditions apply.

SIKA SCHWEIZ AG
Aliva Equipment
Tüffenwies 16
CH-8048 Zürich
Switzerland

Contact
Phone +41 58 436 32 22
Fax +41 58 436 41 40
aliva.equipment@ch.sika.com
www.aliva-equipment.com

BUILDING TRUST

© Sika Schweiz AG / Aliva Equipment / KMy / 10.2015